HCD-S70C/S90C

SERVICE MANUAL

Ver 1.1 2001. 06

US Model
Canadian Model
E Model
Tourist Model

This set is the Tuner/CD player section in MHC-C7EX/MHC-C9EX.

Photo : HCD-S90C

Model Name Using Similer Mechanism	NEW
CD Mechanism Type	CDM 23X1-5BD3
Base Unit Type	BU-5BD3B
Optical Pick-up Type	KSS-240A

SPECIFICATIONS

Tuner section
FM stereo, FM/AM superheterodyne tuner

FM tuner section

Tuning range 87.5 – 108.0 MHz
Antenna terminals 75 ohm unbalanced
Intermediate frequency 10.7 MHz

AM tuner section

Tuning range
AM: 530 - 1,710 kHz
(MW) (with the AM tuning interval set at 10 kHz)
531 - 1,710 kHz
(with the AM tuning interval set at 9 kHz)
SW: 5.95 - 17.90 MHz
(E, Tourist model only)
Antenna AM loop antenna
External antenna terminals
Intermediate frequency 450 kHz

CD player section
System Compact disc digital audio system
Laser Semiconductor laser
Wavelength 780 – 790 nm
Frequency response 2 Hz – 20 kHz
Signal-to-noise ratio More than 95 dB
Dynamic range More than 90 dB

Supplied accessories
AM loop antenna (1)
Remote (1)
Sony SUM-3 (NS) batteries (2)
FM antenna (1)
Speaker cords (2) (for MHC-C7EX)
Flat cord (1)
Audio cords (2) (for MHC-C9EX)
(for connecting speakers)

General
Power requirements
120 V AC, 60Hz (U.S.A. Canadian model)
120 V, 220 V, 230 V – 240 V AC Adjustable 50/60Hz (E, Tourist model)
Power consumption
MHC-C9EX: 80 W (U.S.A. model)
90 W (Canadian model)
100 W (E, Tourist model)
MHC-C7EX: 250 W (U.S.A. model)
350 VA (Canadian model)
180 W (E, Tourist model)
Dimensions
Approx. 280 x 205 x 315 mm (w/h/d)
(11 1/8 x 8 1/8 x 12 1/2 inches)
Mass
Approx. 5.0 kg (11 lb 4 oz)

Design and specifications are subject to change without notice.

MINI Hi-Fi COMPONENT SYSTEM

SONY®

9-959-771-12
2001F0200-1
© 2001.6
Sony Corporation
Home Audio Company
Shinagawa Tec Service Manual Production Group

TABLE OF CONTENTS

Section	Title	Page
SECTION 1.	SERVICING NOTE	3
SECTION 2.	GENERAL	6
SECTION 3.	DISASSEMBLY	
3-1.	Case	8
3-2.	Front Panel	8
3-3.	Main Board, CD Block	9
SECTION 4.	ELECTRICAL ADJUSTMENTS	10
SECTION 5.	DIAGRAMS	
5-1.	Circuit Boards Location	14
5-2.	Semiconductor Lead Layouts	15
5-3.	Block Diagram — Tuner Section —	16
5-4.	Block Diagram — CD Section —	19
5-5.	Printed Wiring Board — Main Section —	24
5-6.	Schematic Diagram — Main Section —	27
5-7.	IC Block Diagrams — Main Section —	32
5-8.	Schematic Diagram — Panel Section —	33
5-9.	Printed Wiring Board — Panel Section —	37
5-10.	Schematic Diagram — Tuner Section —	41
5-11.	Printed Wiring Board — Tuner Section —	43
5-12.	IC Pin Functions	
	• IC201 (μPD75516GF-572-3B9) Mechanism controller	45
	• IC601 (μPD75518GF-243-3B9) Master control	47
	• IC701 (μPD78043GF-097-3B9) Tuner Timer control	49
SECTION 6.	EXPLODED VIEWS	
6-1.	Front Panel Section	51
6-2.	CD Mechanism Section-1	52
6-3.	CD Mechanism Section-2	53
6-4.	Optical Pick-up Section	54
SECTION 7.	ELECTRICAL PARTS LIST	55

Notes on chip component replacement

- Never reuse a disconnected chip component.
- Notice that the minus side of a tantalum capacitor may be damaged by heat.

Flexible Circuit Board Repairing

- Keep the temperature of the soldering iron around 270 °C during repairing.
- Do not touch the soldering iron on the same conductor of the circuit board (within 3 times).
- Be careful not to apply force on the conductor when soldering or unsoldering.

SAFETY-RELATED COMPONENT WARNING !!

COMPONENTS IDENTIFIED BY MARK ⚠ OR DOTTED LINE WITH MARK ⚠ ON THE SCHEMATIC DIAGRAMS AND IN THE PARTS LIST ARE CRITICAL TO SAFE OPERATION. REPLACE THESE COMPONENTS WITH SONY PARTS WHOSE PART NUMBERS APPEAR AS SHOWN IN THIS MANUAL OR IN SUPPLEMENTS PUBLISHED BY SONY.

SAFETY CHECK-OUT
(US model only)

After correcting the original service problem, perform the following safety checks before releasing the set to the customer:
Check the antenna terminals, metal trim, "metallized" knobs, screws, and all other exposed metal parts for AC leakage. Check leakage as described below.

LEAKAGE

The AC leakage from any exposed metal part to earth ground and from all exposed metal parts to any exposed metal part having a return to chassis, must not exceed 0.5 mA (500 microampers). Leakage current can be measured by any one of three methods.

1. A commercial leakage tester, such as the Simpson 229 or RCA WT-540A. Follow the manufacturers' instructions to use these instruments.

2. A battery-operated AC milliammeter. The Data Precision 245 digital multimeter is suitable for this job.

3. Measuring the voltage drop across a resistor by means of a VOM or battery-operated AC voltmeter. The "limit" indication is 0.75 V, so analog meters must have an accurate low-voltage scale. The Simpson 250 and Sanwa SH-63Trd are examples of a passive VOM that is suitable. Nearly all battery operated digital multimeters that have a 2V AC range are suitable. (See Fig. A)

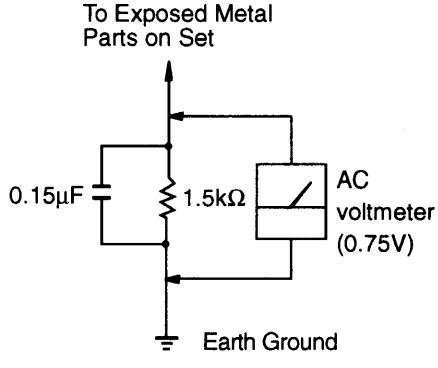

Fig. A. Using an AC voltmeter to check AC leakage.

ATTENTION AU COMPOSANT AYANT RAPPORT À LA SÉCURITÉ!!

LES COMPOSANTS IDENTIFIÉS PAR UNE MARQUE ⚠ SUR LES DIAGRAMMES SCHÉMATIQUES ET LA LISTE DES PIÈCES SONT CRITIQUES POUR LA SÉCURITÉ DE FONCTIONNEMENT. NE REMPLACER CES COMPOSANTS QUE PAR DES PIÈCES SONY DONT LES NUMÉROS SONT DONNÉS DANS CE MANUEL OU DANS LES SUPPLÉMENTS PUBLIÉS PAR SONY.

SECTION 1
SERVICING NOTE

NOTES ON HANDLING THE OPTICAL PICK-UP BLOCK OR BASE UNIT

The laser diode in the optical pick-up block may suffer electrostatic break-down because of the potential difference generated by the charged electrostatic load, etc. on clothing and the human body.
During repair, pay attention to electrostatic break-down and also use the procedure in the printed matter which is included in the repain parts.
The flexible board is easily damaged and should be handled with care.

NOTES ON LASER DIODE EMISSION CHECK

The laser beam on this model is concentrated so as to be focused on the disc reflective surface by the objective lens in the optical pick-up block. Therefore, when checking the laser diode emission, observe from more than 30 cm away from the objective lens.

LASER DIODE AND FOCUS SEARCH OPERATION CHECK

1. Make POWER switch on with no disc inserted and the disc table closed.
2. Confirm that the following operation is performed while observing the objective lens.

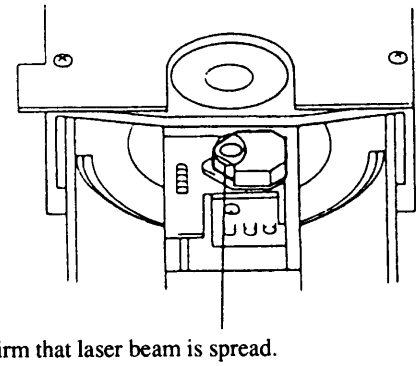

❶ Confirm that laser beam is spread.
❷ Up and down motion of the objective lens. (3 times)

CAUTION
Use of controls or adjustments or performance of procedures other than those specified herein may result in hazardous radiation exposure.

Laser component in this product is capable of emitting radiation exceeding the limit for Class 1.

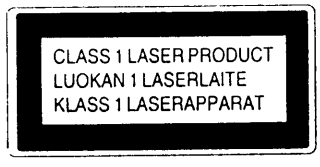

This appliance is classified as a CLASS 1 LASER product.
The CLASS 1 LASER PRODUCT MARKING is located on the rear exterior.

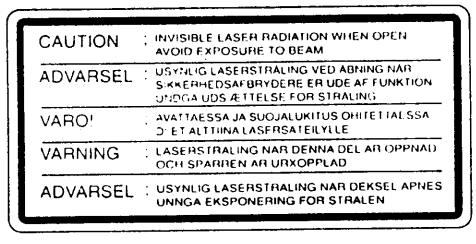

This caution label is located inside the unit.

Disc Taking Out Procedures

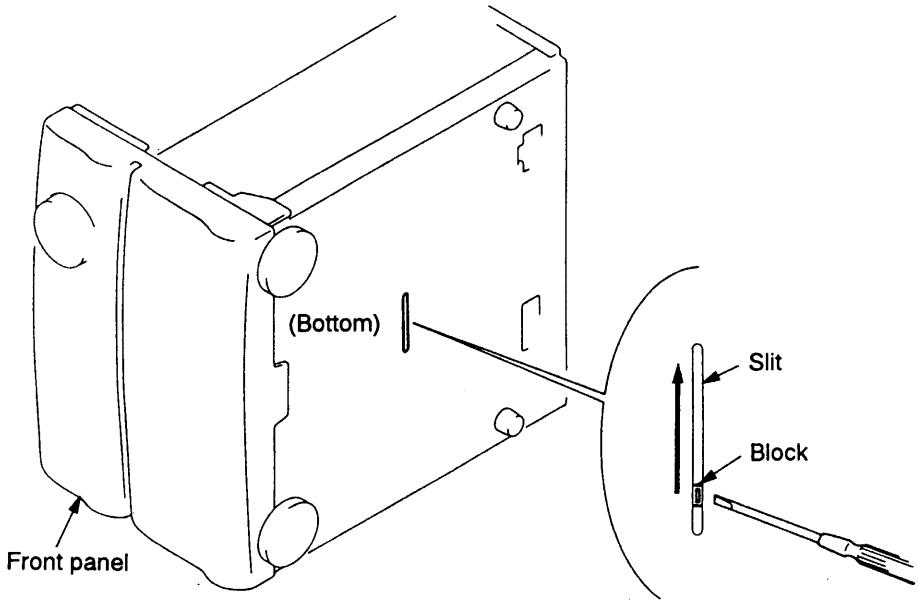

1) Insert a thin stick into the hollow of the white block and move it in the arrow direction.
(When a disc is chucked, handle the unit as follows to avoid disc removal.)

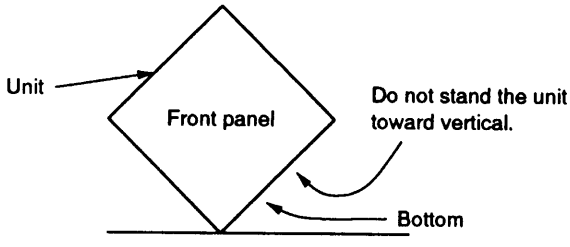

2) Turn the pulley A in the arrow ↻ direction and make sure that the disc tray moves in the arrow ⬅ direction. And further turn the pulley A until the tray aligns with other trays.

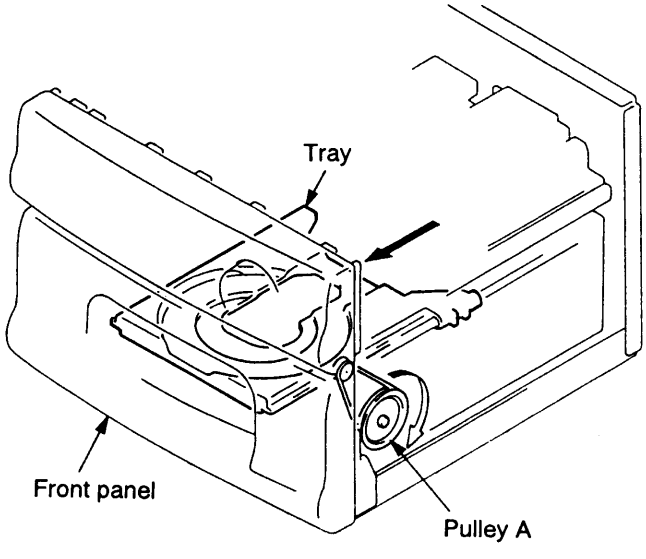

3) Open the front panel lid. Turn the pulley B to allow the stock, which has the disc tray, to go up and down until the disc inserted tray aligns with the front panel lid position .

4) Turn the pulley A in the arrow ○ direction to allow the disc inserted tray to be ejected. Take out the disc and turn the pulley A in the reverse direction to allow the disc inserted tray to align with other trays.

In case two or more trays have discs, repeat step 3) and 4).

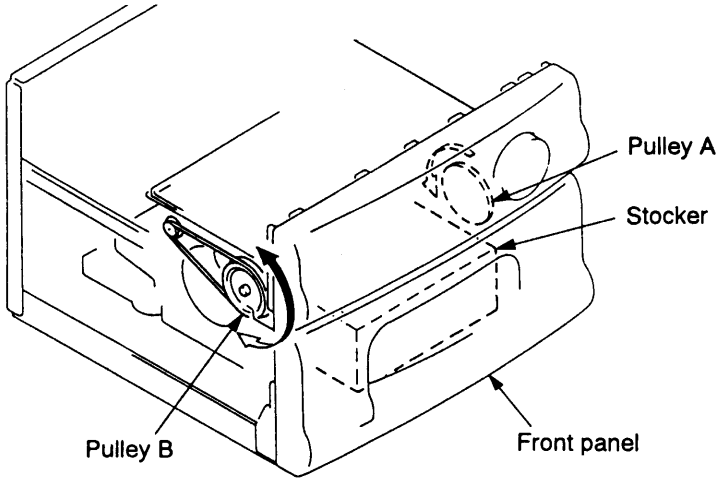

⁎ 2 Initial setting procedures

1) In case turning ON the system power supply allows the mechanism to work:
Fist, make sure that all discs have been taken out.

Open the disc No.1.
↓
Turn OFF the system power supply.
↓
Make sure that "OFF" appears on the CD display.
↓
Blinking and character disappearing indicates setting completion.

2) In case turning ON the system power supply does not allow the mechanism to work:
Move the disc tray as shown in Fig.

Initial Setting Procedures

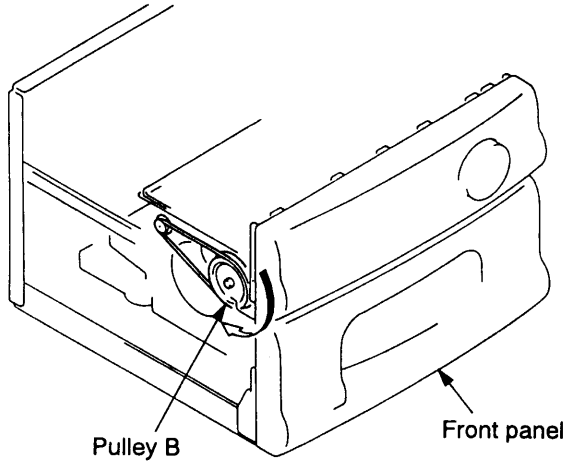

⁎ Make sure that all trays are in the correct positions. Turn the pulley B in the arrow direction until it stops.

SECTION 2
GENERAL

This section is extracted from instruction manual.

Front Panel

Tuner section

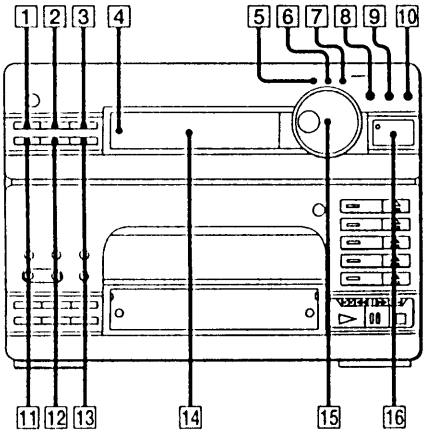

1 TIMER SET button (24)
2 SLEEP button (23)
3 CLOCK DISPLAY button (6)
4 CLOCK SET button (6)
5 TUNING indicator (12)
6 AUTO indicator (12)
7 PRESET indicator (13)
8 MODE button (12)
9 STEREO/MONO button (12)
10 MEMORY/NEXT button (6, 12, 13, 24)
11 ONCE button* (24)
12 DAILY button* (24)
13 REC TIMER button* (24)
14 Display window (6, 12, 13, 23, 24)
15 MULTI CONTROLLER (6, 12, 13, 24)
16 TUNER/BAND button* (12, 24)

CD player section

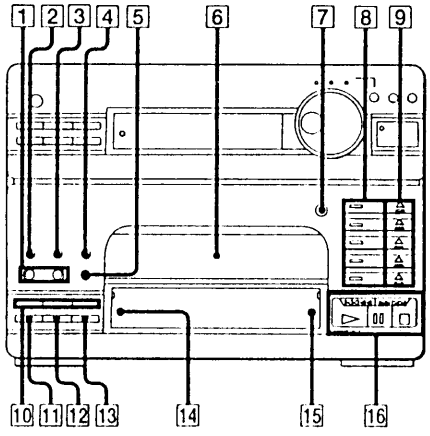

1 CHARACTER ◄/► buttons (8, 10)
2 MEMO INPUT button (10)
3 ERASE button (11)
4 S.F.FILE button (11)
5 CURSOR button (11)
6 Disc tray (7)
7 MEMO CHECK button (11)
8 DISC 1 – 5 buttons and disc tray indicator (7, 8)
9 ≙ OPEN/CLOSE buttons (7)
10 PLAY MODE buttons
CONTINUE (7, 9)
SHUFFLE (9)
PROGRAM (9, 17)
11 REPEAT button (10)
12 CHECK button (9)
13 CLEAR button (9)
14 EDIT button (16)
15 TIME button (8, 10)
16 CD player operating buttons
▷ (play)* (7)
▯▯ (pause) (8)
□ (stop) (8)
⏮◄◄/►►⏭
(manual search /AMS) (8)

Display Window

Tuner

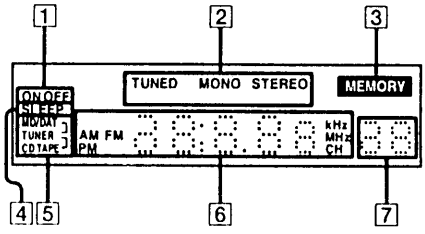

1 Timer indication (24)
2 Tuner indication (12)
3 MEMORY indication (13)
4 SLEEP indication (23)
5 Timer program source indication (24)
6 Frequency/time indications (6, 12, 23, 24)
7 Preset radio station number (13)

CD player

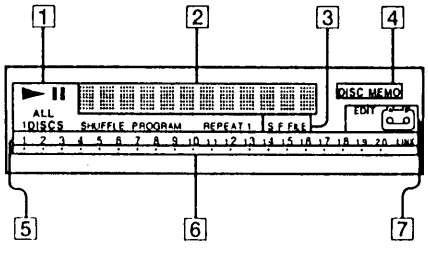

1 Play mode indication (7, 8, 9, 10)
2 Playing time/disc memo indications (7, 9, 11)
3 S.F.FILE indication (11)
4 DISC MEMO indication (11)
5 Music calendar (7, 8)
6 Track indicators (7, 8)
7 CD editing mode indication (16)

Remote

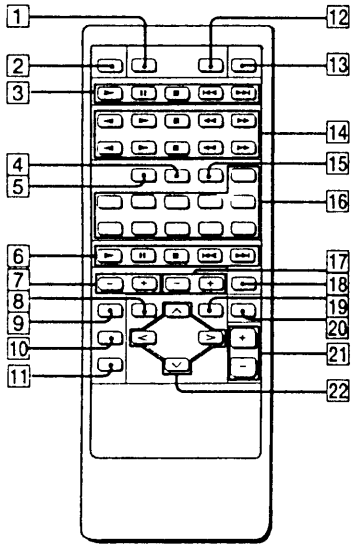

1 FUNCTION button (7, 26)
2 TUNER BAND button (12, 24)
3 MD recorder operating buttons
- ► (play)
- II (pause)
- ■ (stop)
- ⏮ (manual search/AMS)
- ⏭ (manual search/AMS)

4 DISC button (8)
5 TUNER button (13)
6 CD player operating buttons
- ► (play) (7)
- II (pause) (8)
- ■ (stop) (8)
- ⏮ (manual search/AMS) (8)
- ⏭ (manual search/AMS) (8)

7 REAR LEVEL +/– buttons (for MHC-C9EX only) (22)
8 MODE ON button (19)
9 PRO LOGIC button (for MHC-C9EX only) (22)
10 DELAY TIME button (for MHC-C9EX only) (22)
11 TEST TONE button (for MHC-C9EX only) (22)
12 SLEEP button (23)
13 SYSTEM POWER switch (6)
14 Cassette deck operating buttons (14)
- ► (front side play)
- ◄ (reverse side play)
- ■ (stop)
- ►► (fast rightward)
- ◄◄ (fast leftward)

15 TRACK button (8)
16 CD/Tuner numeric buttons (8, 13)
17 CENTER LEVEL +/– buttons (for MHC-C9EX only) (22)
18 DISC SKIP button (7)
19 MODE OFF button (20)
20 DIRECT button (MHC-C9EX) (20)
EFFECT button (MHC-C7EX) (20)
21 VOL +/– button (19)
22 CURSOR CONTROL buttons (19)

SECTION 3
DISASSEMBLY

Note : Follow the disassembly procedure in the numerical order given.

3-1. CASE

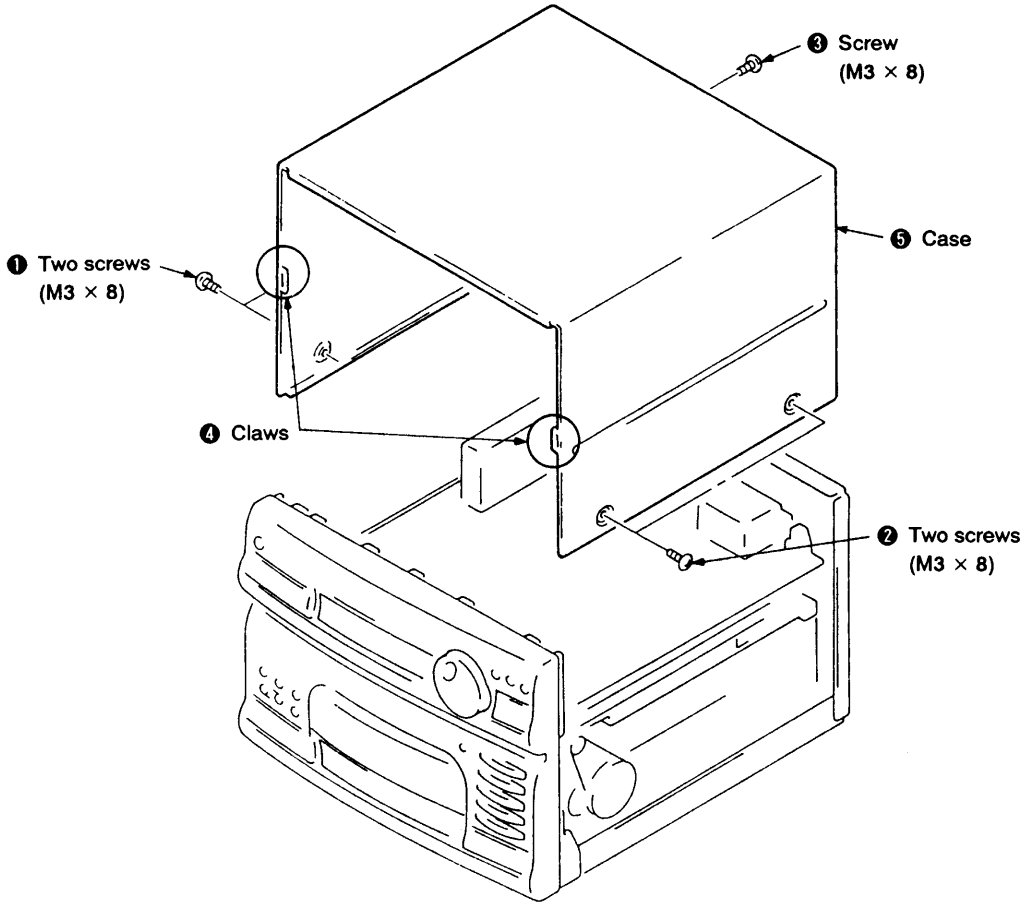

3-2. FRONT PANEL

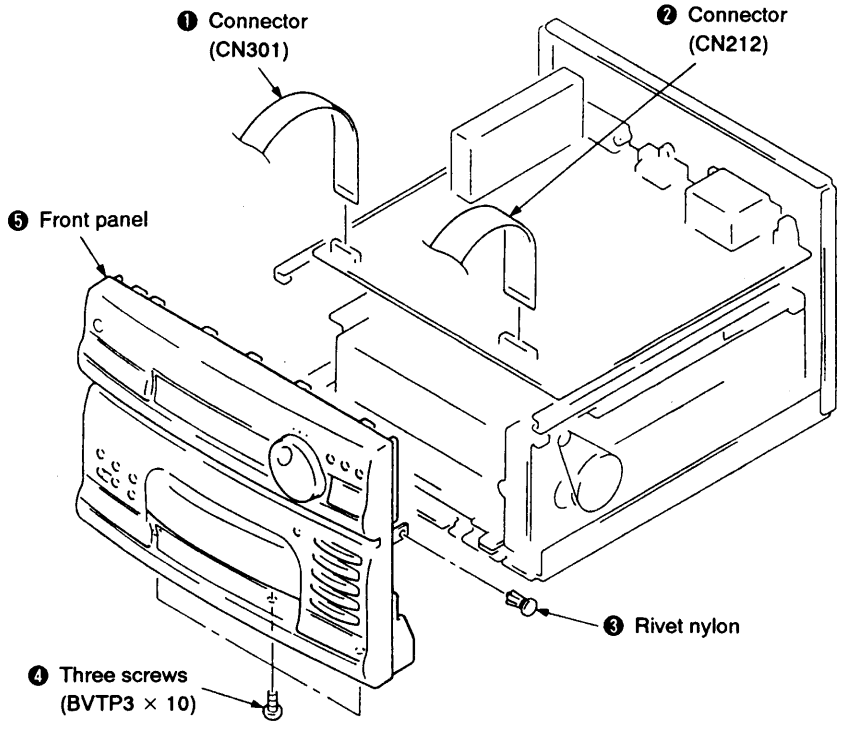

3-3. MAIN BOARD, CD BLOCK

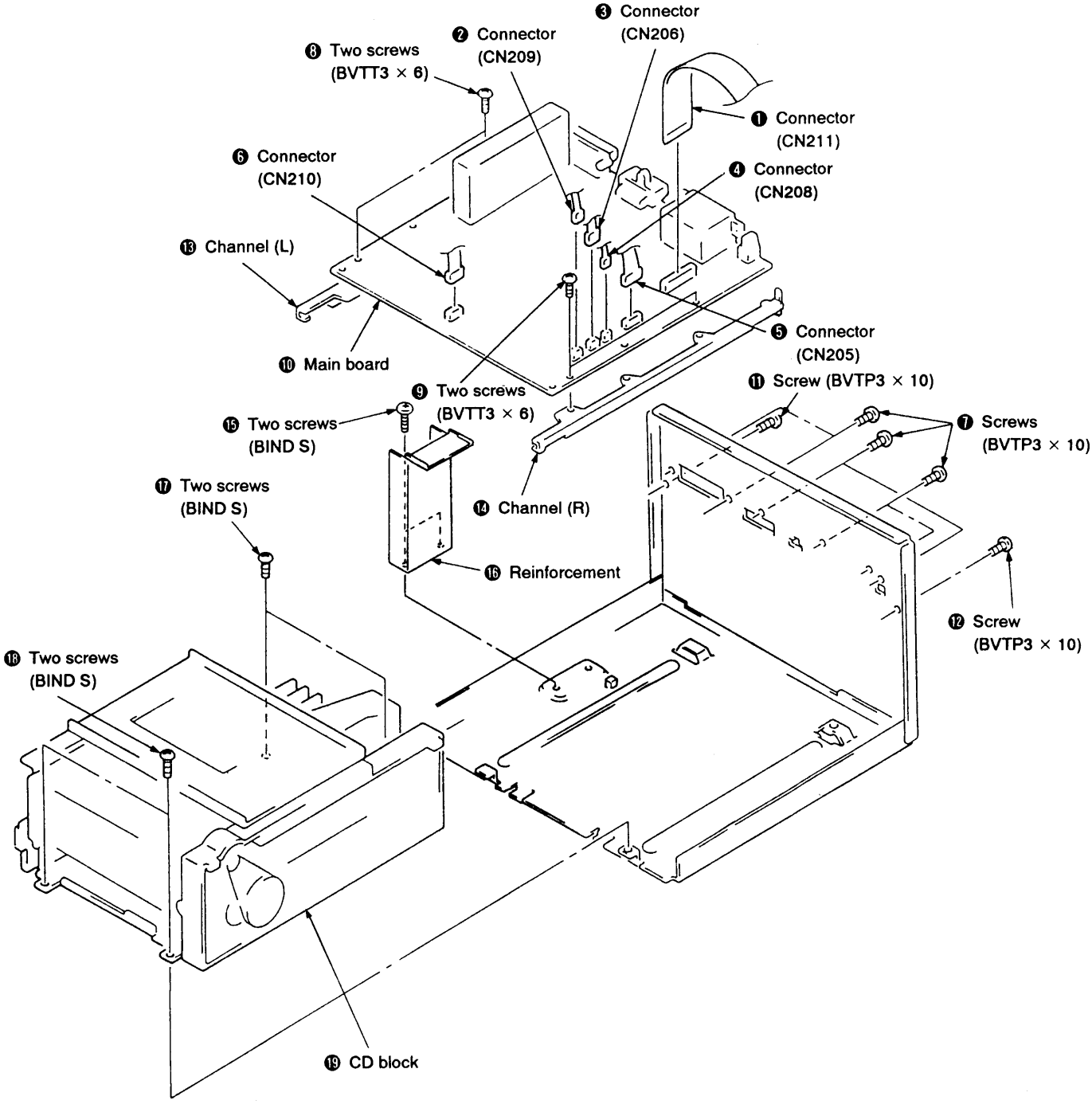

SECTION 4
ELECTRICAL ADJUSTMENTS

Precautions in Repairing

If the front end unit fails, it is difficult to repair the inner circuits, so replace the entire front end unit.

FM SECTION

FM Discriminator Adjustment (NULL Adjustment)

Setting :
BAND : FM

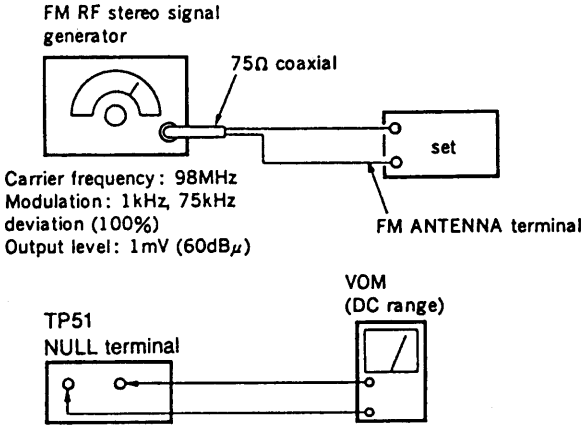

Procedure :
1. Tune the set to 98MHz.
2. Adjust IFT51 for 0Vdc reading on the VOM.

Note : FM Tuning Level adjustment should be made after FM discriminator alignment.

FM Tuned Indication Lighting Level

Setting :
BAND : FM

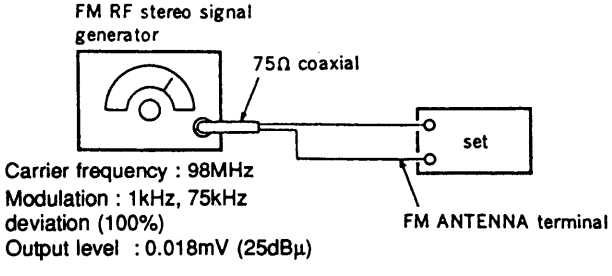

Procedure :
1. Tune the set to 98MHz.
2. Adjust RV52 so that the TUNED indicator goes on.

FM Stereo Separation Adjustment

Setting :
BAND : FM

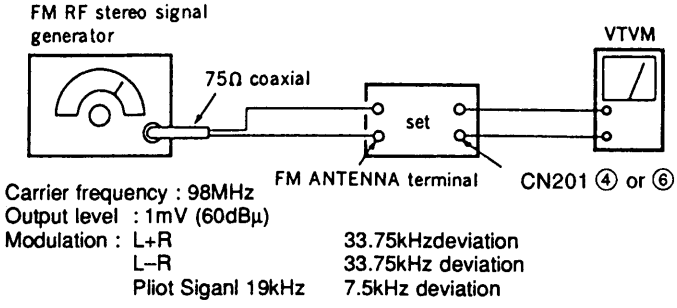

Procedure :
Tune the set to 98MHz.

FM stereo Signal generator output channel	VTVM connection	VTVM reading (dB)
L-CH	L-CH	Ⓐ
R-CH	L-CH	Ⓑ Adjust RV53 for minimum reading.
R-CH	R-CH	Ⓒ
L-CH	R-CH	Ⓓ Adjust RV53 for minimum reading.

L-CH Stereo separation : Ⓐ − Ⓑ
R-CH Stereo separation : Ⓒ − Ⓓ

The separations of both channels should beequal.

AM SECTION

AM Tuned Indication Lighting Level

Setting :
BAND : FM

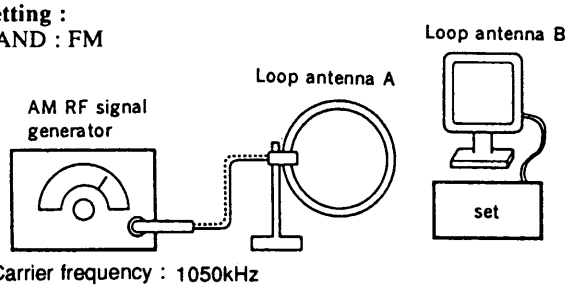

Procedure :
1. Set loop antenna A so that the loop antenna B input level becomes 55dBμ/m (0.6m V/m).
2. Tune the set to 1050kHz
3. Adjust RV51 so that the TUNED indicator goes on.

SW Control Voltage Adjustment (Frequency Coverge Adjustment) (Except US, Canadian model)

Setting :
BAND : SW
Procedure :
1. Connect digital voltmeter to diode D1 center lead and ground.
2. Adjust for a following value reading on digital voltmeter.

	Set frequency	Adjustment part	Reading on digital voltmeter
SW	f min. 5.95MHz	T2	1.2Vdc
	f max. 17.9MHz	CV2	8.5Vdc

SW Tracking Adjustment (Except US, Canadian model)

Setting :
BAND : SW

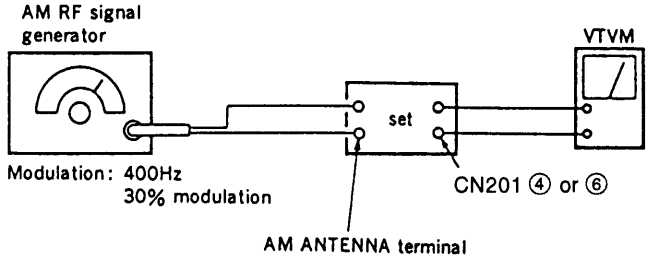

Procedure :
Adjust for a maximun reading on VTVM.

	Set frequency	Adjustment part
SW	7MHz	T1
	17MHz	CV1

- Repeat the procedures is each adjustment several times, and the frequency coverage and tracking adjustments should be finally done by the trimmer capacitors.

Adjustment Location:

TCB BOARD
— Component Side —

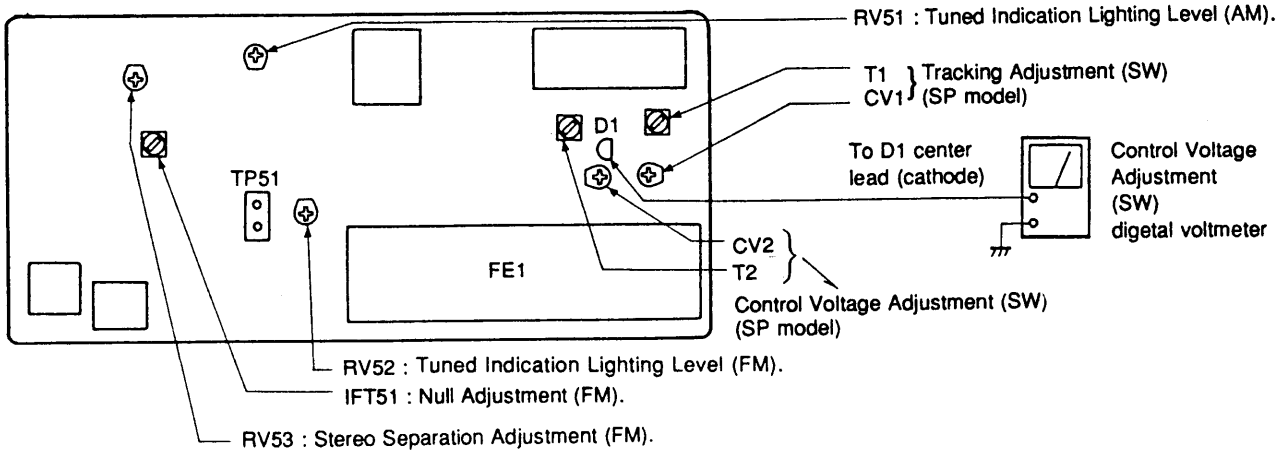

Note :

1. CD Block basically constructed to operate without adjustment. Therefore, check each item in order given.
2. Use YEDS-18 disc (3-702-101-01) unless otherwise indicated.
3. Use the oscilloscope with more than 10MΩ impedance.
4. Clean an object lens by an applicator with neutral detergent when the signal lever is low than specified value with the following checks.

S Curve Check

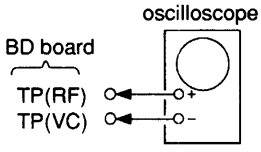

Procedure :

1. Connect oscilloscope to test point TP (FE) on BD board.
2. Connect between test point TP (FES) and TP (VC) by lead wire.
3. Turned Power switch on.
4. Put disc (YEDS-18) in and turned Power switch on again and actuate the focus search. (actuate the focus search when disc table is moving in and out.)
5. Check the oscilloscope waveform (S curve) is symmetrical between A and B. And confirm peak to peak level within 3±1 Vp-p.

S-curve waveform

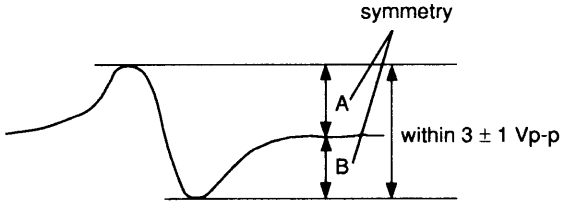

6. After check, remove the lead wire connected in step 2.

Note :
- Try to mesure several times to make sure than the ratio of A : B or B : A is more than 10 : 7.
- Take sweep time as long as possible and light up the brightness to obtain best waveform.

RF Level Check

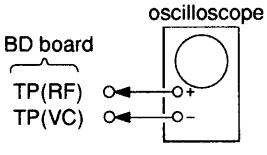

Procedure :

1. Connect oscilloscope to test point TP (RF) on BD board.
2. Turned Power switch on.
3. Put disc (YEDS-18) in and playback.
4. Confirm that oscilloscope waveform is clear and check RF signal level is correct or not.

Note :

Clear RF signal waveform means that the shape "◊" can be clearly distinguished at the center of the waveform.

RF signal waveform

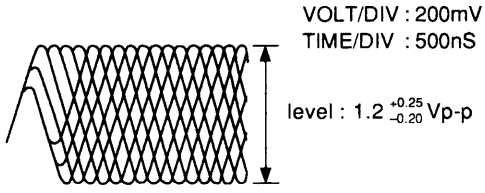

E-F Balance Check

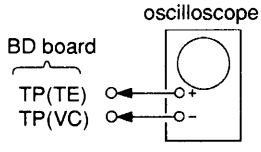

Procedure :

1. Connect IC 201 ⑤③ pin (MAIN BOARD) to ground and TP (TES) to TP (VC) with lead wire.
2. Connect oscilloscpe to test point TP (TE) on BD board.
3. Turned Power switch on.
4. Put disc (YEDS-18) in and playback.
5. Confirm that the oscilloscope waveform is symmetrical on the top and bottom in relation to 0V, and check this level.

Traverse waveform

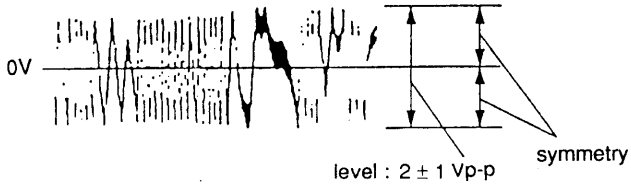

6. Remove the lead wire connected in step 1.

RF Free-run Frequency Check

Procedure :

1. Connect frequency counter to IC 202 ④① pin (MAIN BOARD) with lead wire.

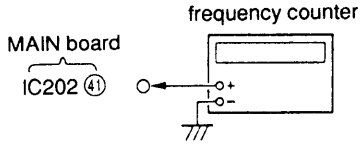

2. Turned Power switch on.
3. Confirm that reading on frequency counter is 4.3218MHz.

Adjustment Location :

[BD BOARD] — Conductor Side —

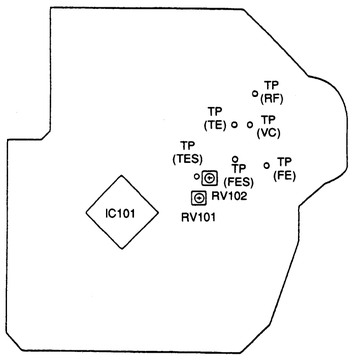

SECTION 5
DIAGRAMS

5-1. CIRCUIT BOARD LOCATION

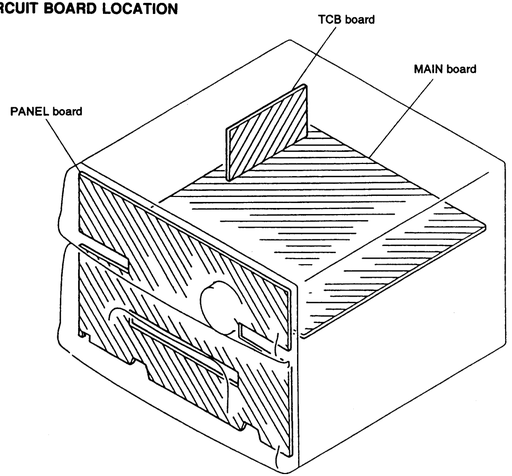

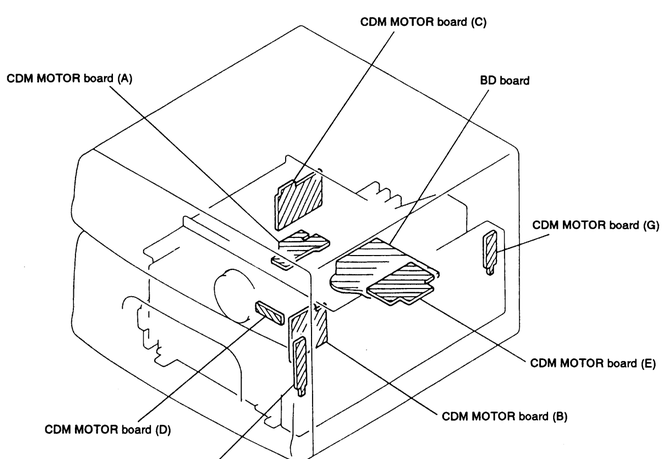

5-2. SEMICONDUCTOR LEAD LAYOUTS

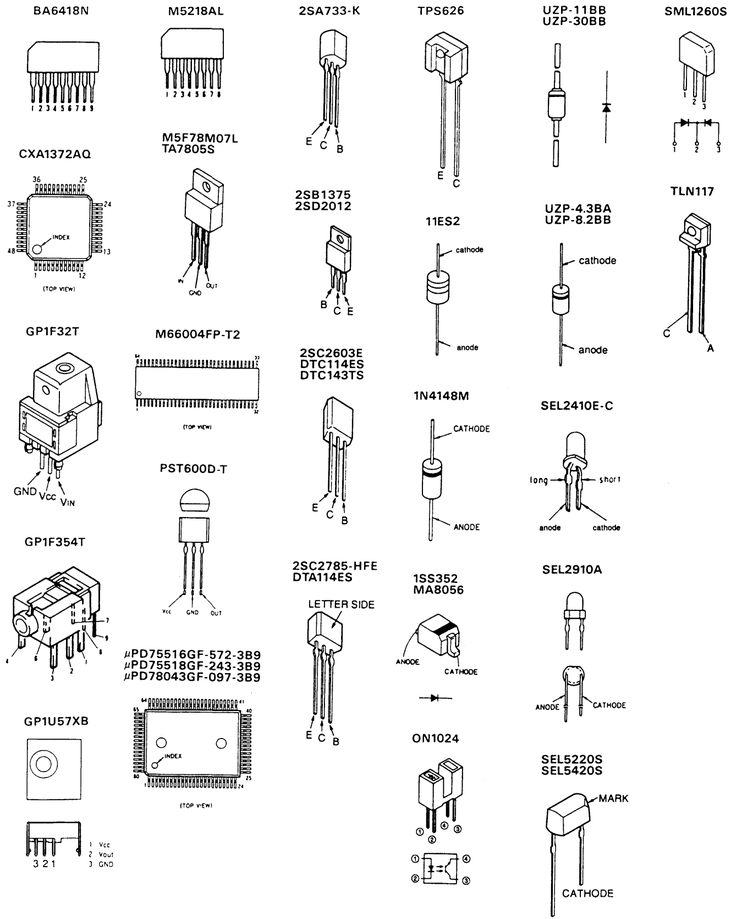

5-3. BLOCK DIAGRAM — TUNER SECTION —

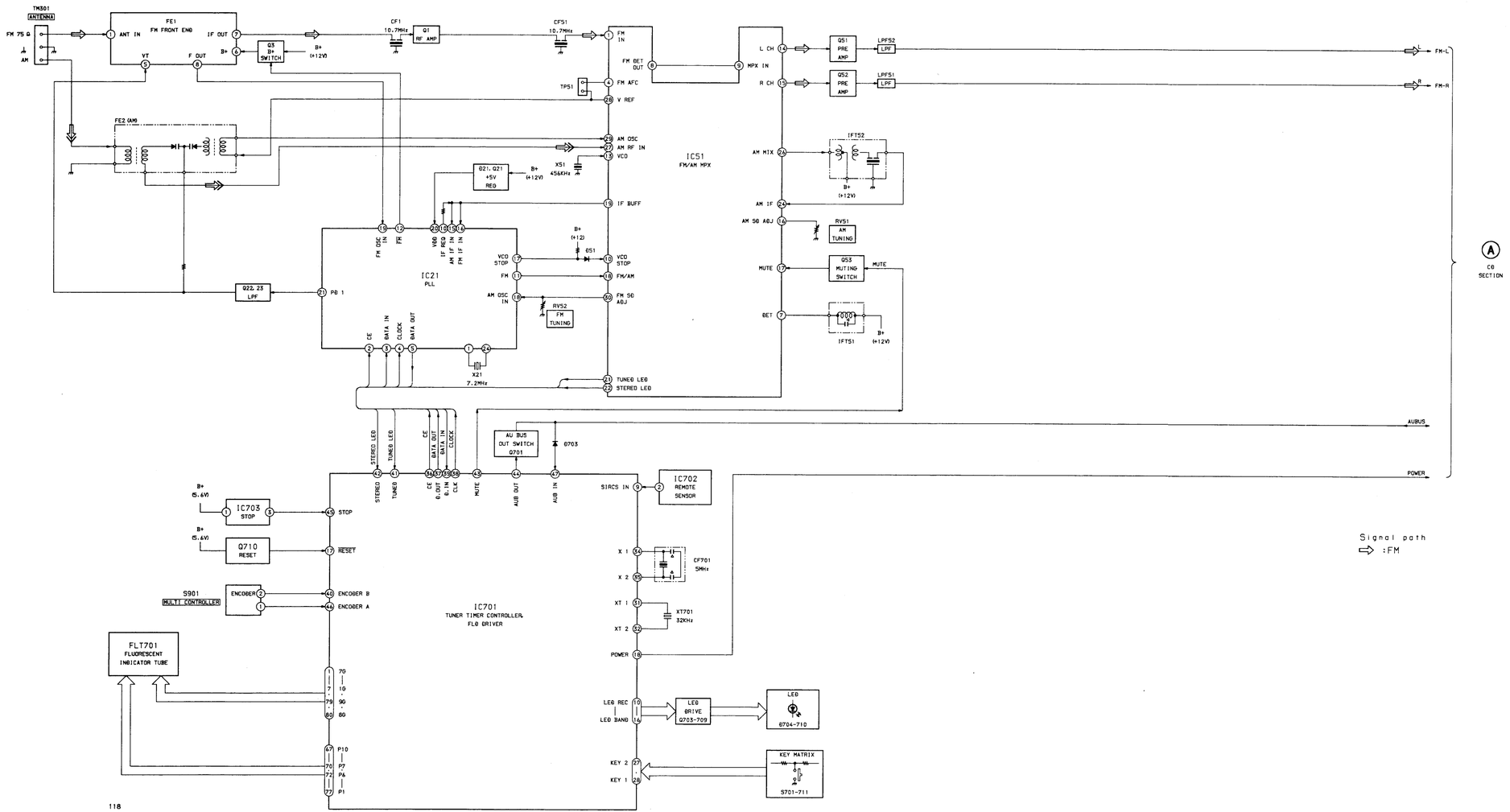

5-4. BLOCK DIAGRAM — CD SECTION —

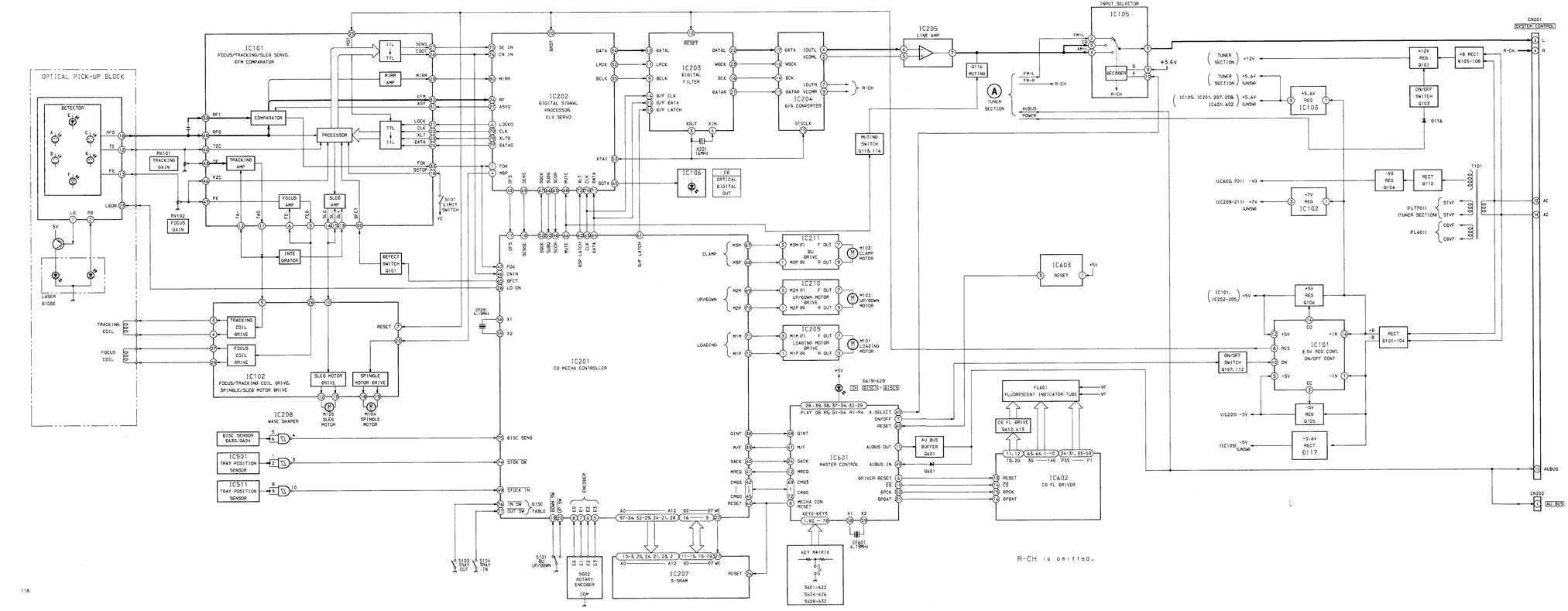

5-5. PRINTED WIRING BOARD — MAIN SECTION —

- See page 14 for Circuit Boards Location.
- See page 15 for Semiconductor Lead Layouts.

- **Semiconductor Location**

Ref. No.	Location
D101	B-16
D102	B-16
D103	B-16
D104	B-16
D105	B-18
D106	B-18
D107	B-18
D108	B-18
D109	C-19
D110	D-15
D111	C-15
D112	C-15
D113	C-14
D116	C-19
D117	E-18
D118	H-19
D201	H-18
D202	H-18
D206	H-12
D207	I-13
D208	F-17
D301	E-18
D302	K-19
IC101 (BD)	B-2
IC101 (MAIN)	D-18
IC102 (BD)	B-3
IC102 (MAIN)	D-15
IC103	H-19
IC105	F-19
IC106	A-12
IC201	I-15
IC202	E-14
IC203	G-14
IC204	F-15
IC205	F-15
IC207	I-17
IC208	I-18
IC209	I-13
IC210	H-13
IC211	G-13
IC501	D-6
IC511	D-6
Q101 (BD)	B-2
Q101 (MAIN)	D-19
Q103	C-19
Q104	C-15
Q105	C-18
Q106	C-18
Q107	E-18
Q112	E-18
Q113	E-17
Q114	E-17
Q116	G-17
Q117	F-17

Note:

- ○—— : parts extracted from the component side.
- ▒▒▒ : Pattern on the side which is seen.
- ▭ : Chip components extracted from the rear side.

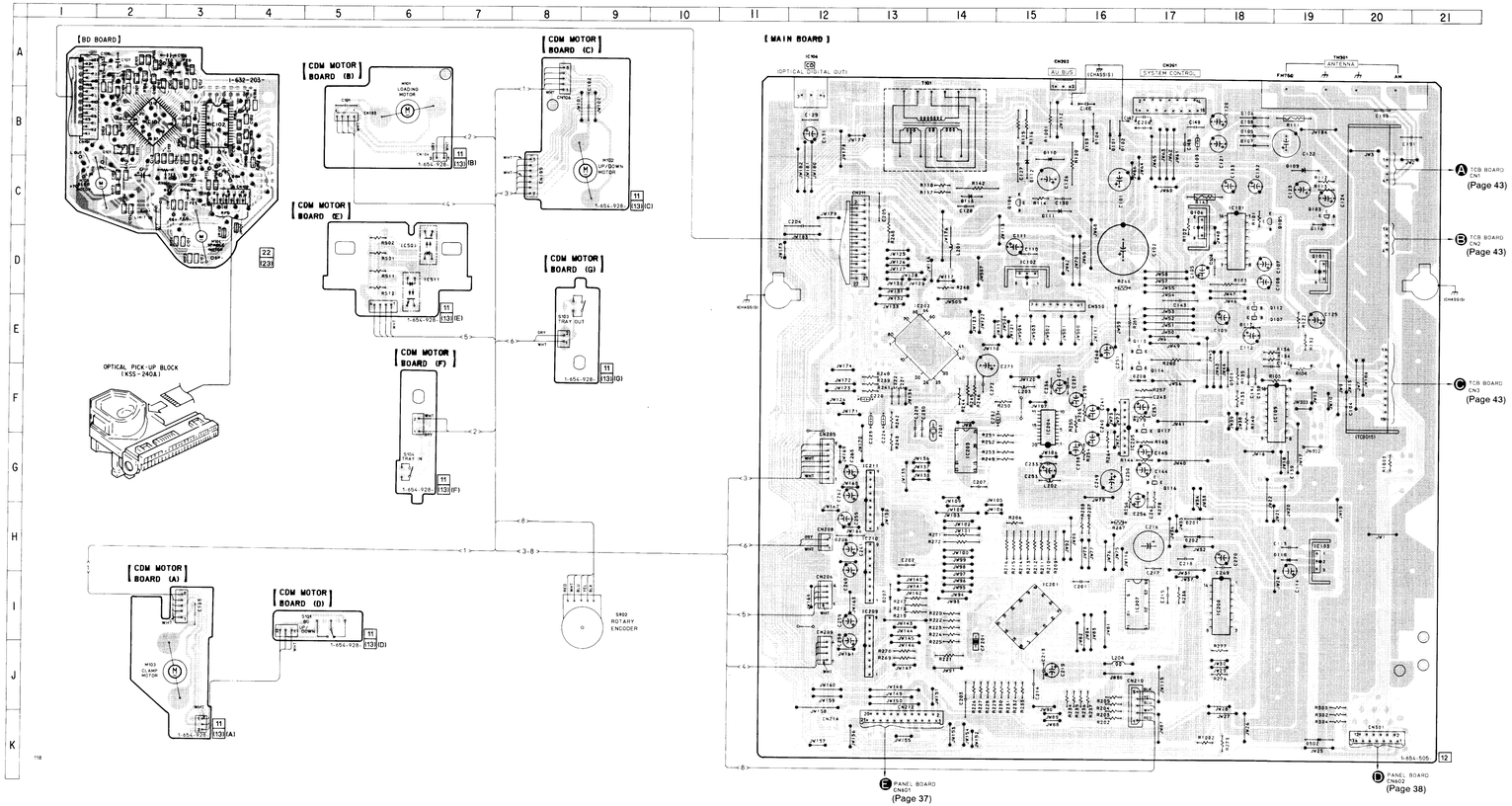

• Waveforms

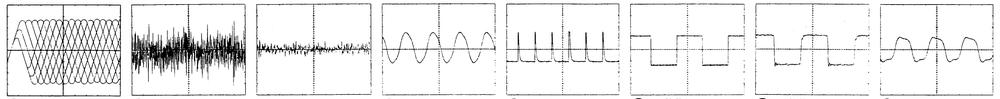

5-6. SCHEMATIC DIAGRAM — MAIN SECTION —

- See page 32 for IC Block Diagrams.
- See page 45 for IC Pin Functions. (IC201)

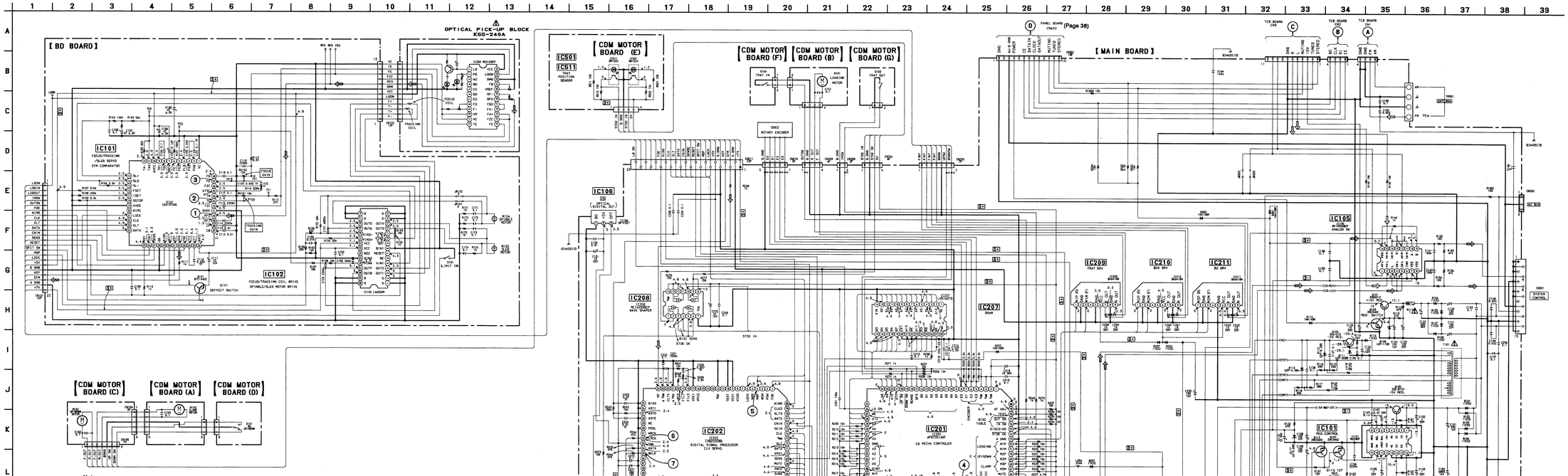

Note:

- All capacitors are in µF unless otherwise noted. pF:µµF 50WV or less are not indicated except for electrolytics and tantalums.
- All resistors are in Ω and 1/4W or less unless otherwise specified.
- % : indicates tolerance.
- Δ : internal component.
- ▭ : fusible resistor.

Note:	Note:
The components identified by mark Δ or dotted line with mark Δ are critical for safety. Replace only with part number specified.	Les composants identifiés par une marque Δ sont critiques pour la sécurité. Ne les remplacer que par une pièce portant le numéro spécifié.

- B+ : B+ Line
- B− : B− Line
- ▭ : adjustment for repair.
- Voltage and waveforms are dc with respect to ground under no-signal (deturned) conditions.
  no mark : CD PLAY
- Voltages are taken with a VOM (Input impedance 10MΩ). Voltage variations may be noted due to normal production tolerances.
- Waveforms are taken with a oscilloscope. Voltage variations may be noted due to normal production tolerances.
- Circled numbers refer to waveforms.
- Signal path.
  ⇨ : FM
  ⇨ : CD

5-7. IC BLOCK DIAGRAMS — MAIN SECTION —

IC101 CXA1372AQ

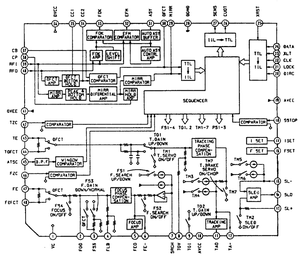

IC102 LA6532M

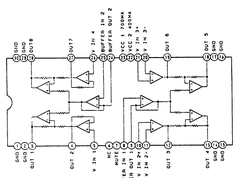

MAIN 基板

IC101 M5290P-16

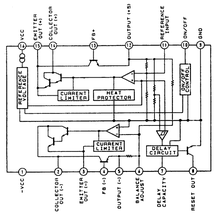

IC202 CXD2500BQ

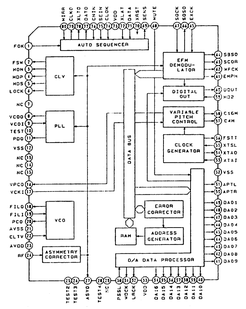

IC105 MC1452BCP

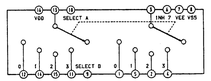

IC203 CXD2554M

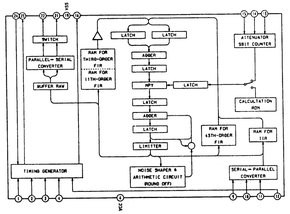

IC209, 210, 211 BA6418N

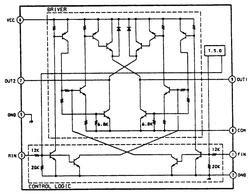

5-8. SCHEMATIC DIAGRAM — PANEL SECTION —

• See page 47 for IC Pin Function. (IC601) & page 49 for IC Pin Function. (IC701)

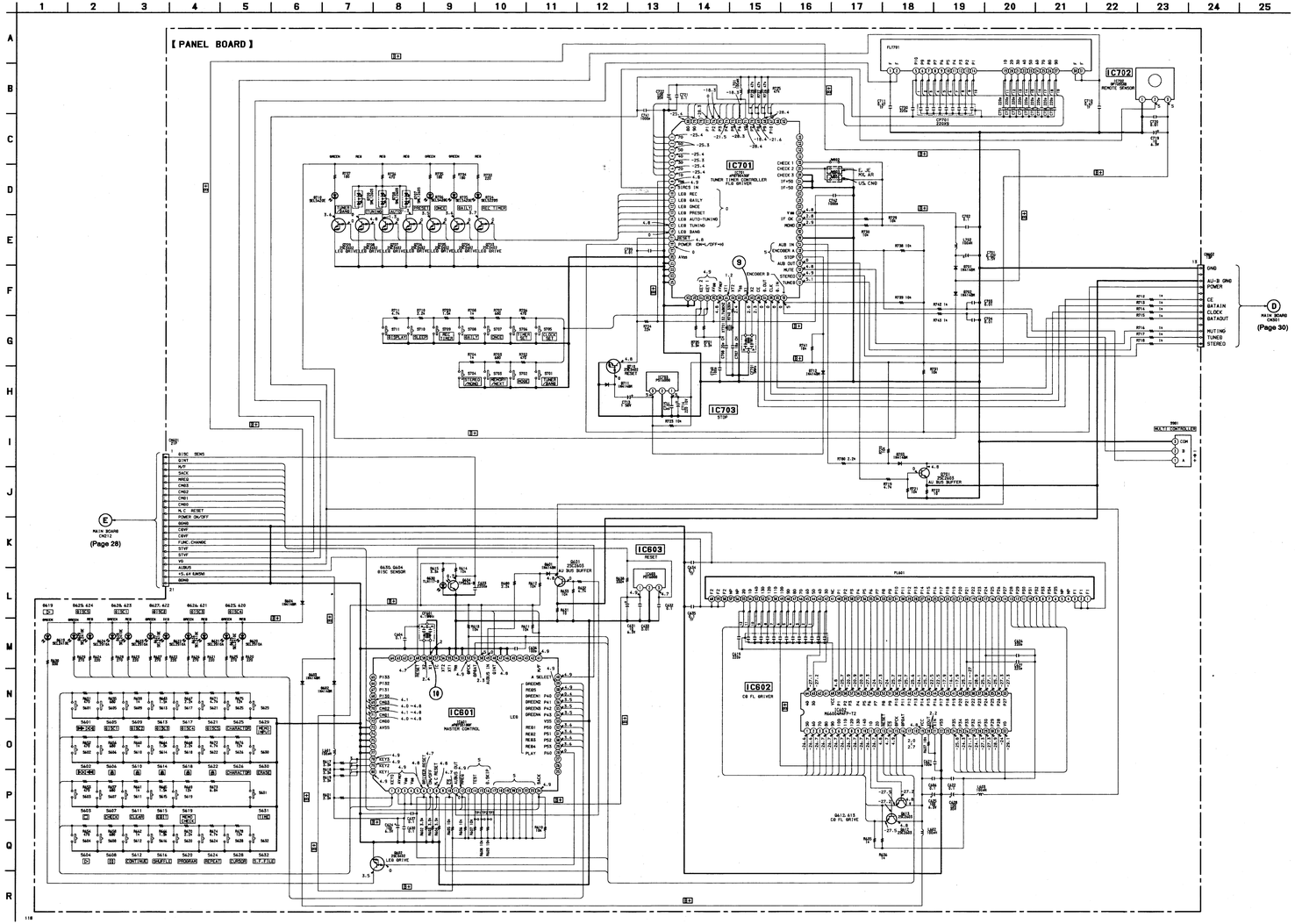

• Waveforms

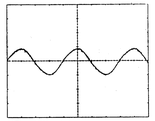

⑨ PANEL BOARD
IC701 ⑥ pin
5MHz 3.86Vp-p

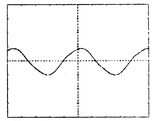

⑩ PANEL BOARD
IC601 ⑥ pin
4.19MHz 3.86Vp-p

• IC Block Diagram

IC602 M66004FP

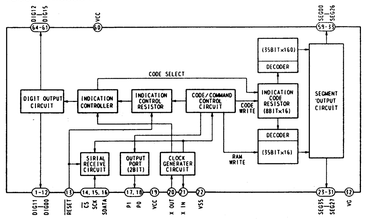

Note:

- All capacitors are in μF unless otherwise noted. pF:μμF 50WV or less are not indicated except for electrolytics and tantalums.
- All resistors are in Ω and 1/4W or less unless otherwise specified.
- % : indicates tolerance.
- △ : internal component.

Note:	Note:
The components identified by mark △ or dotted line with mark △ are critical for safety. Replace only with part number specified.	Les composants identifiés par une marque △ sont critiques pour la sécurité. Ne les remplacer que par une pièce portant le numéro spécifié.

- B+ : B+ Line
- Voltage and waveforms are dc with respect to ground under no-signal (deturned) conditions.
  no mark : CD PLAY
- Voltages are taken with a VOM (Input impedance 10MΩ).
  Voltage variations may be noted due to normal production tolerances.
- Waveforms are taken with a oscilloscope.
  Voltage variations may be noted due to normal production tolerances.
- Circled numbers refer to waveforms.
- Abbreviations
  CND : Canadian model.
  JE : Tourist model.
  MX : Mexican model.
  AR : Argentine model.

5-9. PRINTED WIRING BOARD — PANEL SECTION —

- See page 14 for Circuit Boards Location.
- See page 15 for Semiconductor Lead Layouts.

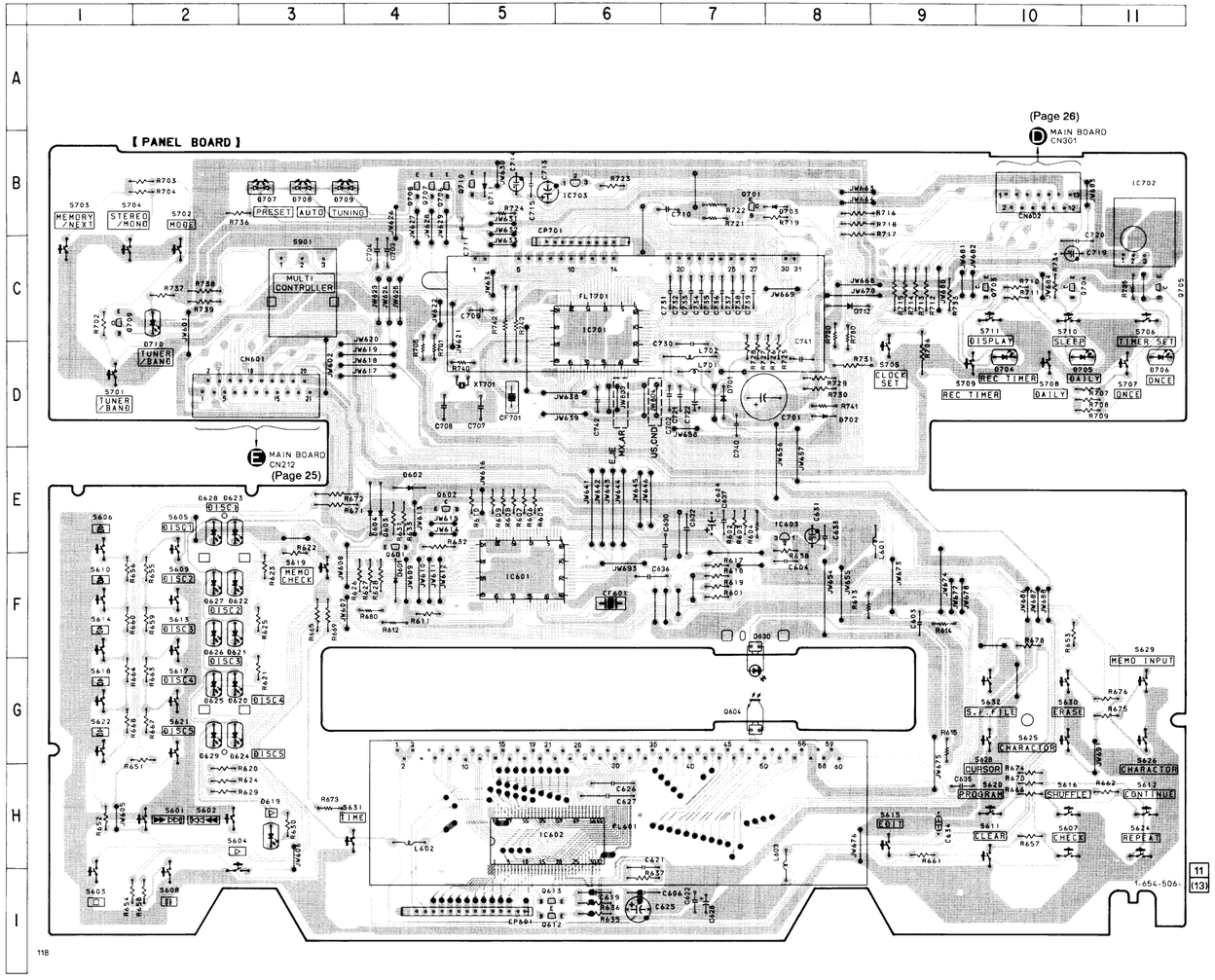

118

- **Semiconductor Location**

Ref. No.	Location
D601	E-4
D602	E-4
D603	E-4
D604	E-4
D619	H-3
D620	G-2
D621	F-2
D622	F-2
D623	F-2
D624	G-2
D625	G-2
D626	F-2
D627	F-2
D628	E-2
D629	G-2
D630	F-7
D701	D-7
D702	D-8
D703	B-8
D704	D-10
D705	D-11
D706	D-11
D707	D-3
D708	D-3
D709	D-3
D710	C-2
D711	B-5
D712	C-8
IC601	F-5
IC602	H-5
IC603	E-8
IC701	C-6
IC702	B-11
IC703	B-6
Q601	E-4
Q602	E-4
Q604	G-7
Q612	I-5
Q613	I-5
Q701	B-7
Q703	C-10
Q704	C-10
Q705	C-11
Q706	B-4
Q707	B-4
Q708	B-4
Q709	C-1
Q710	B-5

Note:

- ○—— : parts extracted from the component side.
- ▒▒▒ : Pattern on the side which is seen.
- ▭ : Chip components extracted from the rear side.
- Abbreviations
  - CND : Canadian model.
  - JE : Tourist model.
  - MX : Mexican model.
  - AR : Argentine model.

5-10. SCHEMATIC DIAGRAM — TUNER SECTION —

• **IC Block Diagrams**

IC21 LC7218M

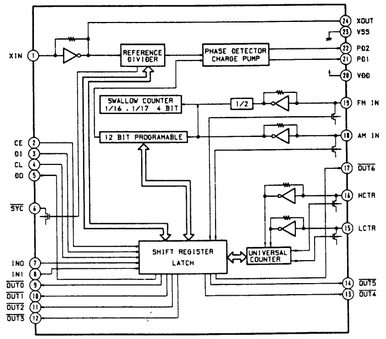

IC51 LA1851NM

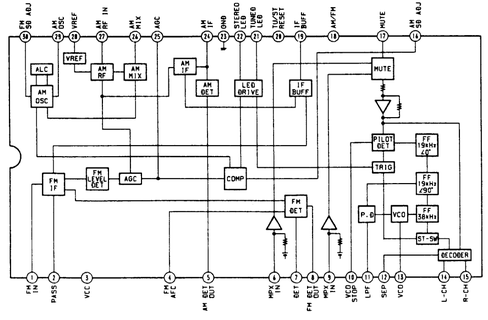

• **Waveforms**

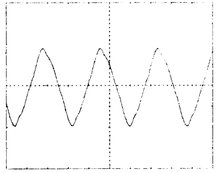

⓫ TCB BOARD
IC71 19 pin
3.6MHz 0.8Vp-p

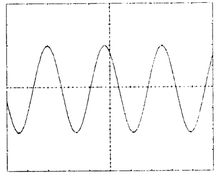

⓬ TCB BOARD
IC21 11 pin
7.2MHz 2.12Vp-p

Note:
- All capacitors are in μF unless otherwise noted. pF:μμF 50WV or less are not indicated except for electrolytics and tantalums.
- All resistors are in Ω and 1/4W or less unless otherwise specified.
- △ : internal component.

Note:	**Note:**
The components identified by mark △ or dotted line with mark △ are critical for safety. Replace only with part number specified.	Les composants identifiés par une marque △ sont critiques pour la sécurité. Ne les remplacer que par une pièce portant le numéro spécifié.

- ▬▬ : B+ Line
- ▭ : adjustment for repair.
- Voltage and waveforms are dc with respect to ground under no-signal (deturned) conditions.
  no mark : FM
  ( ) : AM (MW)
  < > : SW
- Voltages are taken with a VOM (Input impedance 10MΩ). Voltage variations may be noted due to normal production tolerances.
- Signal path.
  ⇨ : FM
- Abbreviations
  CND : Canadian model.
  JE : Tourist model.
  MX : Mexican model.
  AR : Argentine model.

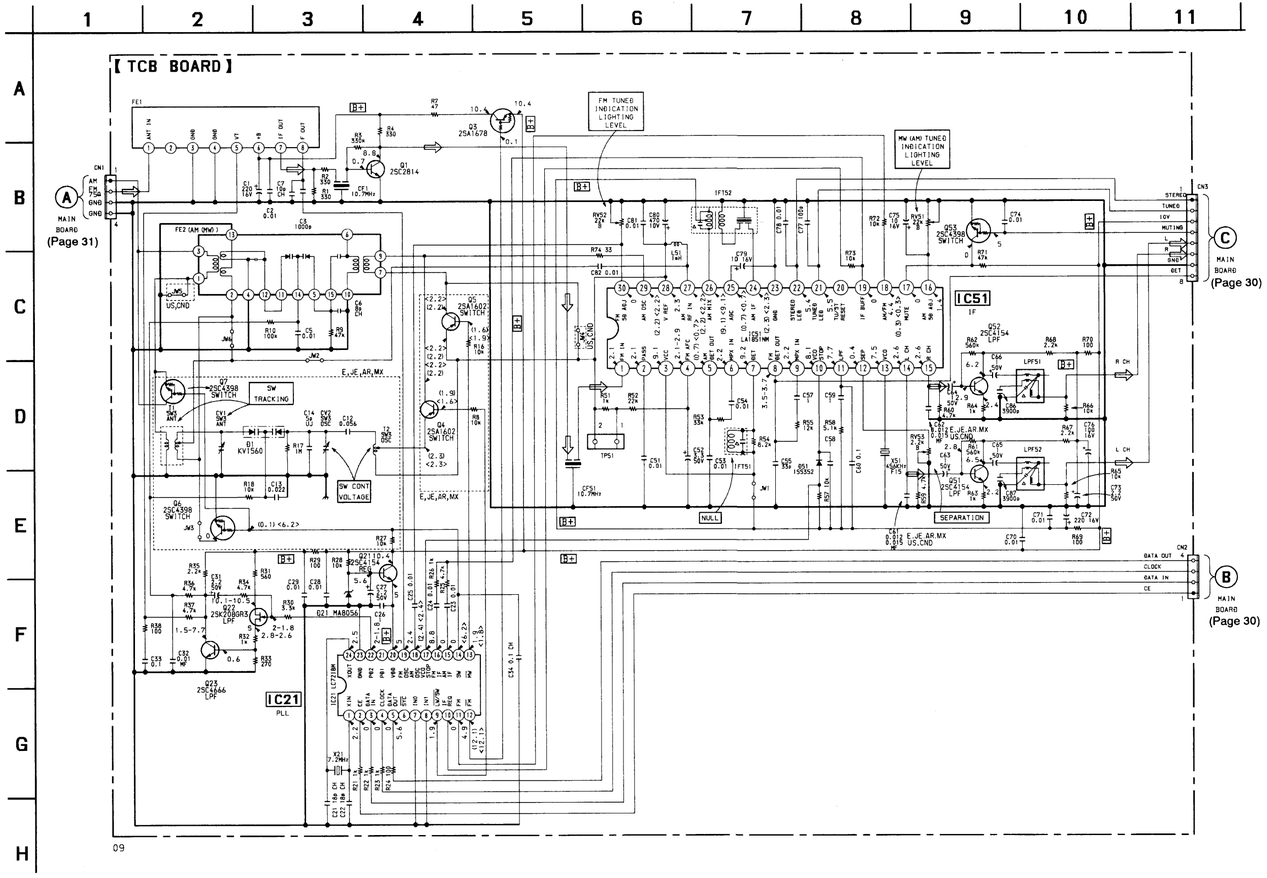

5-11. PRINTED WIRING BOARD — TUNER SECTION —

- See page 14 for Circuit Boards Location.
- See page 15 for Semiconductor Lead Layouts.

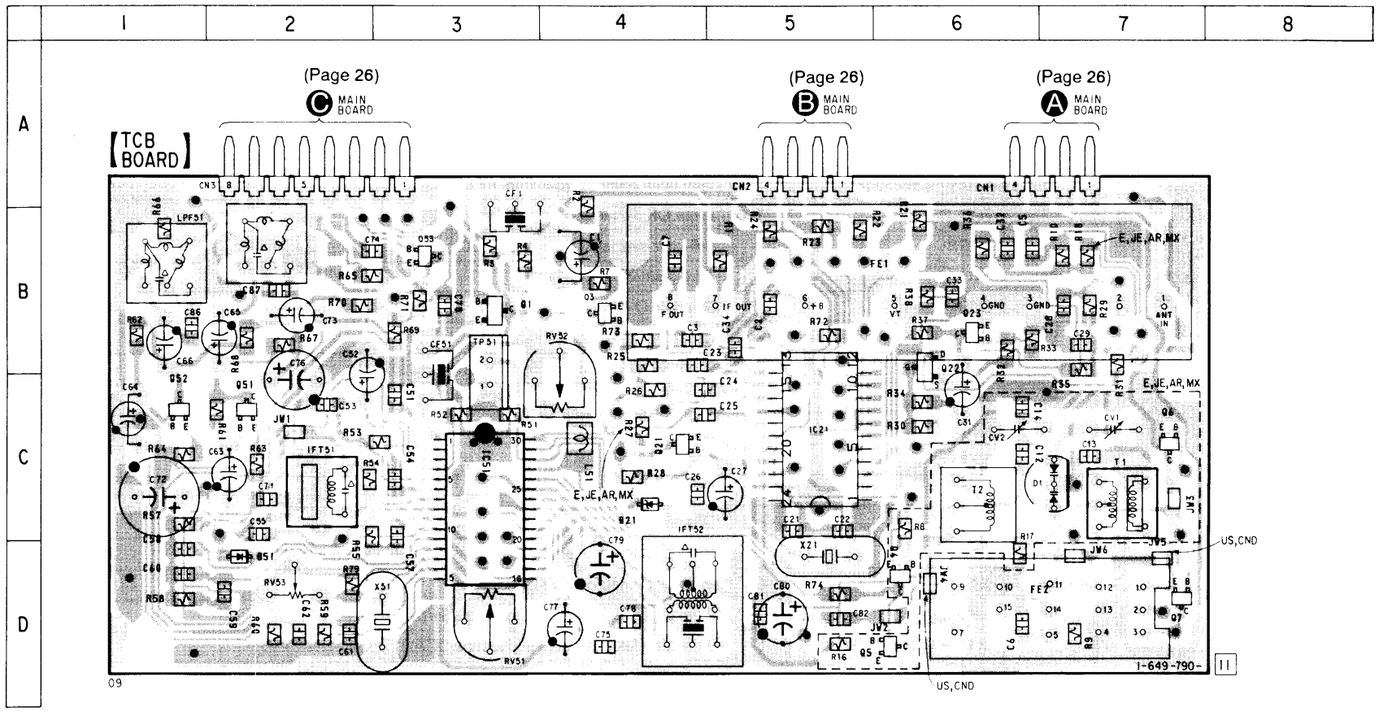

Note:

- ○—— : parts extracted from the component side.
- ● : Through hole.
- △ : internal component.
- : Pattern from the side which enable seeing.

- Abbreviations
  CND : Canadian model.
  JE : Tourist model.
  MX : Mexican model.
  AR : Argentine model.

- **Semiconductor Location**

Ref. No.	Location
D1	C-7
D21	C-4
D51	D-2
IC21	C-5
IC51	C-3
Q1	B-3
Q3	B-4
Q4	D-6
Q5	D-6
Q6	C-7
Q7	D-7
Q21	C-4
Q22	B-6
Q23	B-6
Q51	C-2
Q52	C-1
Q53	B-3

5-12. IC PIN FUNCTIONS

- **IC201 (μPD75516GF-572-3B9) Mechanism controller**

Pin No.	Pin Name	I/O	Function
1			Not used (OPEN)
2	AVDD	–	+5V Power supply
3	VDD	–	
4	VDD	–	
5	E3	I	Stocker position input
6	E2	I	
7	E1	I	
8	E0	I	
9	D7	I/O	Data input/output pins with SRAM (IC207)
10	D6	I/O	
11	D5	I/O	
12	D4	I/O	
13	D3	I/O	
14	D2	I/O	
15	D1	I/O	
16	D0	I/O	
17	GFS	I	GFS signal input from DSP (IC202) "H": OK "L": NG
18	SENSE	I	SENSE signal input from DSP (IC202)
19	$\overline{\text{DOWN SW}}$	I	BU down signal input
20	$\overline{\text{UP SW}}$	I	BU up signal input
21	A11	O	Address output to SRAM (IC207)
22	A10	O	
23	A9	O	
24	A8	O	
25			Not used (OPEN)
26	LD ON	O	Laser diode ON/OFF switching output "H": ON "L": OFF
27	WE	O	Write enable output to SRAM (IC207)
28	A12	O	Address output to SRAM (IC207)
29	A7	O	
30	A6	O	
31	A5	O	
32	A4	O	
33	GND	–	GND
34	A3	O	Address output to SRAM (IC207)
35	A2	O	
36	A1	O	
37	A0	O	
38	QINT	O	Communication data request to Master controller (IC601)
39	M/F	I	Communication data type input from Master controller (IC601) "H": Mechanism command "L": File command
40	SACK	O	Communication data output to Master controller (IC601)

Pin No.	Pin Name	I/O	Function
41	MREQ	I	Communication data request from Master controller (IC601)
42	CMD3	I/O	Communication data input/output with Master controller (IC601)
43	CMD2	I/O	
44	CMD1	I/O	
45	CMD0	I/O	
46	CNIN	I	Trap jump counting input from RF servo (IC101)
47	FOK	I	Focus OK signal input from RF servo (IC101)
48	SCOR	I	Sub code sink input from DSP (IC202)
49	$\overline{\text{STOK IN}}$	I	Tray position input
50	SUBQ	I	Sub code Q data input from DSP (IC202)
51	GND	–	GND
52	SQCK	O	Read clock output of sub code Q to DSP (IC202)
53	ADJ	I	Test mode input Normally: "H" level
54	GND	–	GND
55	XT1	I	Not used (connect to GND)
56	XT2	O	Not used (OPEN)
57	GND	–	GND
58	X1	I	Vibrator connecting pin (4.19MHz)
59	X2	O	Vibrator connecting pin (4.19MHz)
60	RESET	I	Reset signal input from Master controller (IC601)
61	D/F LATCH	O	Serial data latch output to digital filter (IC203)
62	DSP LATCH	O	Serial data latch output to DSP (IC202)
63	CLK	O	Serial data transfer clock output to DSP (IC202) and digital filter (IC203)
64	DATA	O	Serial data output to DSP (IC202) and digital filter (IC203)
65	DFCT SW	O	ON/OFF switching output of RF servo (IC101) defect circuit "L": ON "H": OFF
66	MUTE	O	CD output music control "H": Mute
67	M3M	O	Clamping motor control output
68	M3P	O	
69	M2M	O	Up/down motor control output
70	M2P	O	
71	M1M	O	Loading motor control output
72	M1P	O	
73	A GND	–	GND
74	$\overline{\text{STOK OK}}$	I	Tray position input "L": Stocker UP/DOWN OK
75	DISC SINS	I	Disk sensor input "H": Disk exist "L": Disk does not exist
76	$\overline{\text{IN SW}}$	I	Loading IN switch input
77	$\overline{\text{OUT SW}}$	I	Loading OUT switch input
78	TEST	I	Test mode input Normally: "H" level
79	AF ADJ	I	Test mode input Normally: "H" level
80			Not used (OPEN)

- **IC601 (μPD75518GF-243-3B9) Master control**

Pin No.	Pin Name	I/O	Function
1	KEY0	I	Key data input (A/D change input)
2	AV REF	–	A/D converter power supply (connect to +5V)
3	VDD	–	+5V power supply
4	VDD	–	
5			Not used (OPEN)
6	DRIVER RESET	O	Reset signal output to CD FL tube driver (IC602)
7	ON/OFF	O	+5V power supply switch "L": OFF
8	M.C RESET	O	Reset signal output to Mechanism controller (IC201)
9			Not used (OPEN)
10	$\overline{CS}$	O	Latch signal output to CD FL tube driver (IC602)
11	AU BUS OUT	O	AU bus output
12	MREQ	O	Communication data request to Mechanism controller (IC201)
13	AU BUS/$\overline{SIRCS}$	I	Switch AU BUS/SIRCS, fix AU BUS to "H"
14	TEST	I	Test mode pin "H": test
15	SUF.REP	I	Normally fix SUF.REP="H" and "L" becomes SHUFFLE, ALL-DISK, REP
16	D.SKIP	I	Switch Sound field/$\overline{EDIT}$ (S632) and fix to "H" "H": Sound field file
17			Not used (connect to +5V)
18			
19			
20			
21			
22			
23			
24	SACK	I	Serial data input from Mechanism controller (IC201)
25			Not used (OPEN)
26			
27			
28	P60	O	Display PLAY (LED) green
29	P53	O	Disk display (LED) red (DISC4)
30	P52	O	Disk display (LED) red (DISC3)
31	P51	O	Disk display (LED) red (DISC2)
32	P50	O	Disk display (LED) red (DISC1)
33	VSS	–	GND
34	P43	O	Disk display (LED) green (DISC4)
35	P42	O	Disk display (LED) green (DISC3)
36	P41	O	Disk display (LED) green (DISC2)
37	P40	O	Disk display (LED) green (DISC1)
38	P33	O	Disk display (LED) red (DISC5)
39	P32	O	Disk display (LED) green (DISC5)
40	A SELECT	O	A-select signal output to Input selector (IC105)

Pin No.	Pin Name	I/O	Function
41	M/F	I/O	Signal type communication with Mechanism controller (IC201) "H": Mechanism command "L": File command
42			Not used (OPEN)
43			
44			
45			
46			Not used (connect to GND)
47			
48	QINT	I	Communication data request from Mechanism controller (IC201)
49	AU BUS IN	I	AU Bus input
50			Not used (connect to +5V)
51	DPDAT	O	Serial data output to CD FL tube driver (IC602)
52	DPCK	O	Serial data transfer clock output to CD FL tube driver (IC602)
53			Not used (connect to GND)
54	VSS	–	GND
55	XT1	–	Not used (connect to GND)
56	XT2	–	Not used (OPEN)
57	IC	–	Not used (connect to GND)
58	X1	I	System clock (4.19MHz)
59	X2	O	System clock (4.19MHz)
60	$\overline{\text{RESET}}$	I	System reset input "L": Reset
61			Not used (OPEN)
62			
63			
64			
65	P133	–	
66	P132	–	
67	P131	–	
68	P130	–	
69	CMD3	I/O	Command data line with Mechanism controller (IC201)
70	CMD2	I/O	
71	CMD1	I/O	
72	CMD0	I/O	
73	AVSS	–	GND
74			Not used (connect to GND)
75			
76			
77			
78	KEY3	I	Key data input (A/D conversion input)
79	KEY2	I	
80	KEY1	I	

- **IC701 (μPD78043GF-097-3B9) Tuner timer control**

Pin No.	Pin Name	I/O	Function
1	7G	O	Fluorescent display tube timing output
2	6G	O	
3	5G	O	
4	4G	O	
5	3G	O	
6	2G	O	
7	1G	O	
8	VDD		+5V
9	SIRCS IN	I	SIRCS signal input
10	LED REC	O	REC LED lights
11	LED DAILY	O	DAILY LED lights
12	LED ONCE	O	ONCE LED lights
13	LED PRESET	O	PRESET LED lights
14	LED AUTO-TUNING	O	AUTO-TUNING LED lights
15	LED TUNING	O	TUNING LED lights
16	LED BAND	O	BAND LED lights
17	$\overline{\text{RESET}}$	I	Reset signal input
18	POWER	O	+12V power switch "H": OFF "L": ON
19			Not used (OPEN)
20	AVSS	–	GND
21			Not used (connect to GND)
22			
23			
24			
25			
26			Not used (connect to +5V)
27	KEY2	I	Key data input (A/D conversion input)
28	KEY1	I	
29	AVDD	–	A/D converter power supply (connect to +5V)
30	AVREF	–	A/D converter reference voltage input (connect to +5V)
31	XT1	I	Vibrator connecting pin (32kHz)
32	XT2	O	
33	VSS	–	GND
34	X1	I	Vibrator connecting pin (5MHz)
35	X2	O	
36	CE	O	Enable output to PLL (IC21)
37	D.OUT	O	Serial data output to PLL (IC21)
38	CLK	O	Serial data transfer clock output to PLL (IC21)
39	D.IN	I	Serial data input from PLL (IC21)
40	ENCODER B	I	Encoder input

Pin No.	Pin Name	I/O	Function
41	TUNED	I	TUNED signal input
42	STEREO	I	STEREO signal input
43	MUTE	O	Mute signal output
44	AUB OUT	O	AUDIO bus output
45	STOP	I	STOP signal detection pin
46	ENCODER A	I	Encoder input
47	AUB IN	I	AUDIO bus input
48		–	GND
49	FM/AM	O	Input selector (IC105) switching output "H": FM "L": AM
50	MONO	O	Forced monaural signal output "H": MONO "L": ST
51	IF OK	O	IF frequency NG output "H": NG "L": OK
52	VDD	–	+5V
53			Not used (OPEN)
54			
55			
56			Not used (connect to GND)
57			
58			
59			Not used (GND)
60			
61			Not used (OPEN)
62			
63			
64			
65			
66			
67	P10	O	Fluorescent display tube segment output
68	P9	O	
69	P8	O	
70	P7	O	
71	VG	–	Power supply for Fluorescent display tube (–30V)
72	P6	O	Fluorescent display tube segment output
73	P5	O	
74	P4	O	
75	P3	O	
76	P2	O	
77	P1	O	
78			Not used (OPEN)
79	9G	O	Fluorescent display tube segment output
80	8G	O	

SECTION 6
EXPLODED VIEWS

NOTE:
- -XX, -X mean standardized parts, so they may have some difference from the original one.
- Items marked " * " are not stocked since they are seldom required for routine service. Some delay should be anticipated when ordering these items.
- The mechanical parts with no reference number in the exploded views are not supplied.
- Hardware (# mark) list and accessories and packing materials are given in the last of this parts list.
- Abbreviation
  CND : Canadian model
  JE : Tourist model
  AR : Argentine model
  MX : Mexican model

The components identified by mark ⚠ or dotted line with mark ⚠ are critical for safety.
Replace only with part number specified.

Les composants identifiés par une marque ⚠ sont critiques pour la sécurité.
Ne les remplacer que par une piéce portant le numéro spécifié.

6-1. FRONT PANEL SECTION

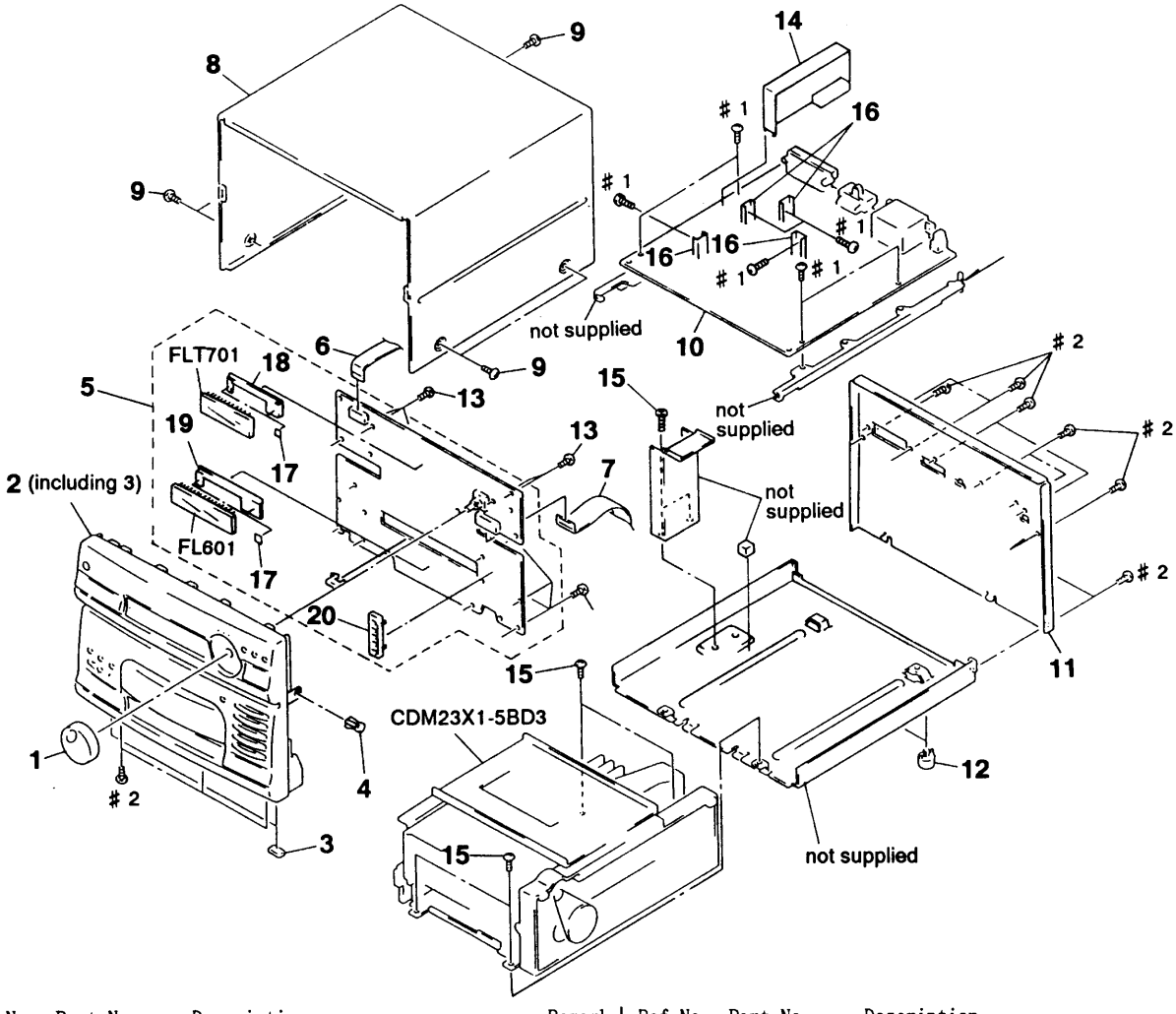

Ref. No.	Part No.	Description	Remark
1	4-970-382-01	KNOB (ST)	
2	X-4945-377-1	PANEL ASSY, FRONT (S70C)	
2	X-4945-379-1	PANEL ASSY, FRONT (S90C)	
3	4-930-336-31	FOOT (FELT)	
4	4-812-134-00	RIVET NYLON, 3.5	
* 5	A-4377-547-A	PANEL BOARD, COMPLETE(US, CND)	
* 5	A-4377-549-A	PANEL BOARD, COMPLETE(E, MX, AR, JE)	
6	1-769-271-11	WIRE (FLAT TYPE)(13 CORE)	
7	1-751-690-11	WIRE (FLAT TYPE)(21 CORE)	
8	4-970-402-22	CASE	
9	3-704-366-01	SCREW (CASE)(M3X8)	
* 10	A-4377-548-A	MAIN BOARD, COMPLETE(US, CND)	
* 10	A-4377-550-A	MAIN BOARD, COMPLETE(E, MX, AR, JE)	
* 11	4-970-403-32	PANEL, BACK (S70C:US)	
* 11	4-970-403-52	PANEL, BACK (S90C:US)	
* 11	4-972-372-31	PANEL, BACK (S70C:CND)	
* 11	4-972-372-41	PANEL, BACK (S90C:CND)	
* 11	4-972-372-51	PANEL, BACK (S70C:E, MX, AR, JE)	
* 11	4-972-372-61	PANEL, BACK (S90C:E, MX, AR, JE)	
12	4-970-381-01	FOOT (REAR)	
13	4-951-620-01	SCREW (2.6X8), +BVTP	
* 14	A-4303-461-A	TCB BOARD, COMPLETE(E, MX, AR, JE)	
* 14	A-4303-462-A	TCB BOARD, COMPLETE(US, CND)	
15	4-972-829-01	SCREW (BIND S)	
* 16	3-309-144-21	HEAT SINK	
* 17	4-921-941-01	CUSHION (FL)	
* 18	4-960-269-01	HOLDER (FL TUBE)	
* 19	4-954-701-01	HOLDER (FL TUBE)	
* 20	4-971-717-01	HOLDER, LED	
21	4-971-718-01	COVER	
FL601	1-519-738-11	INDICATOR TUBE, FLUORESCENT	
FLT701	1-517-215-11	INDICATOR TUBE, FLUORESCENT	

6-2. CD MECHANISM SECTION-1 (CDM23X1-5BD3)

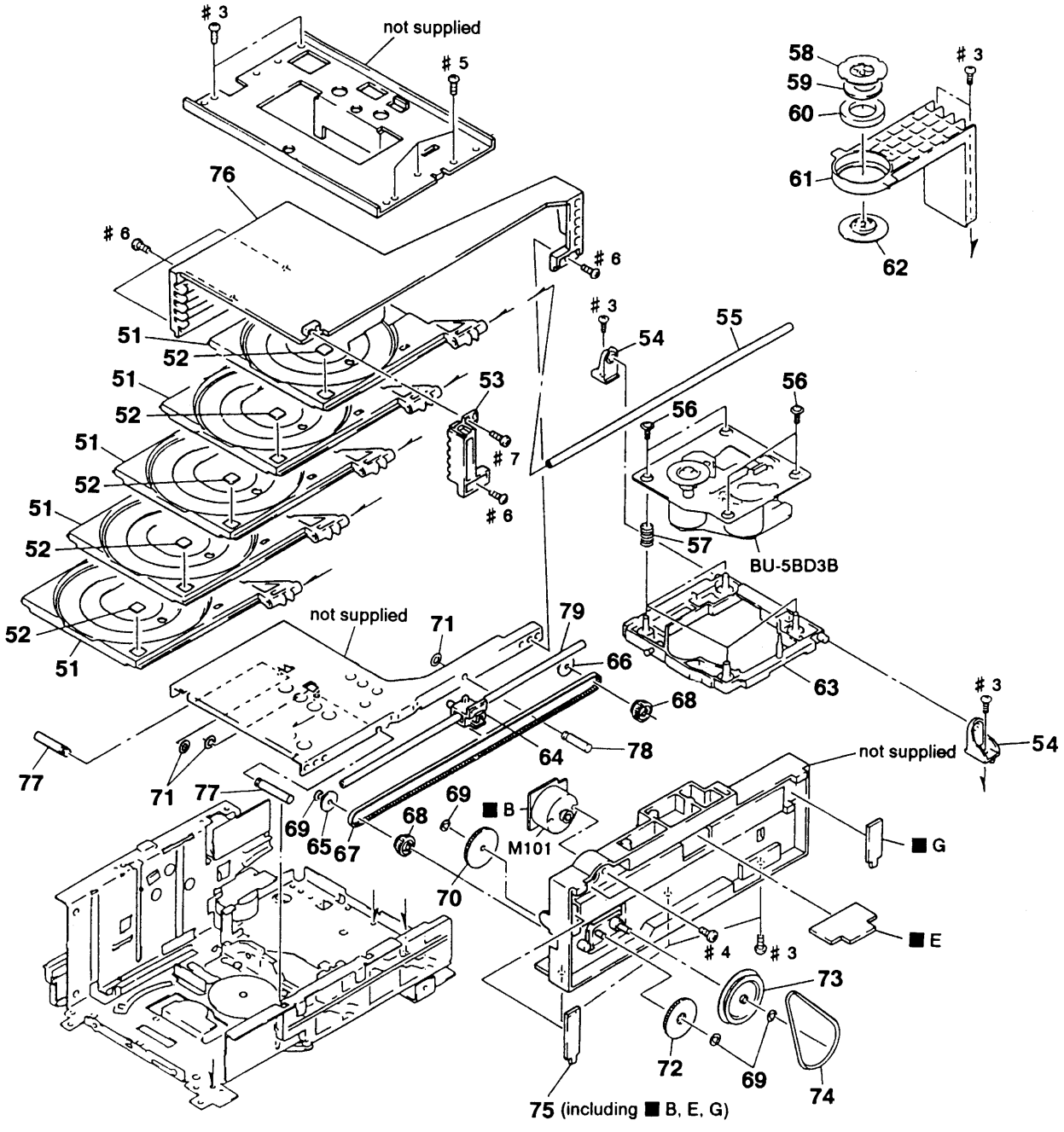

Ref. No.	Part No.	Description	Remark
51	4-971-566-01	TABLE, DISC	
52	4-971-276-01	EMBLEM (TABLE 2)	
53	4-971-572-01	GUIDE (ST-R)	
* 54	4-954-623-01	FULCRUM (BU)	
55	4-971-571-01	SHAFT (TABLE GUIDE)	
56	4-933-134-01	SCREW (+PTPWH M2.6X6)	
57	4-955-575-01	SPRING (BU), COMPRESSION	
58	4-929-762-01	YOKE, CHUCKING	
59	4-955-231-01	SPACER (MG)	
60	1-452-676-11	MAGNET	
61	4-954-650-01	HOLDER (MG)	
62	4-955-230-02	PULLEY (CHUCKING)	
* 63	X-4942-942-1	HOLDER (BU) ASSY	
64	4-971-574-01	SLIDER (TB)	
* 65	4-972-058-01	FLANGE (PULLEY)(A)	

Ref. No.	Part No.	Description	Remark
66	4-954-628-01	FLANGE (PULLEY)	
67	4-954-634-01	BELT (SL)	
68	4-954-629-01	PULLEY (SL)	
69	3-558-708-21	WASHER, STOPPER	
70	4-954-627-01	GEAR (SL)	
71	7-624-200-11	NUT, PUSH 2	
72	4-971-577-01	GEAR (SL2)	
73	3-372-516-01	PULLEY (LOADING)	
74	4-954-624-01	BELT (CDM)	
* 76	4-971-565-01	HOLDER (STOCKER)	
77	4-971-568-01	SHAFT (STOCKER L)	
78	4-971-569-01	SHAFT (STOCKER S)	
79	4-971-570-01	SHAFT (ST-L)	
M101	A-4660-586-A	MOTOR ASSY (LOADING MOTOR)	

6-3. CD MECHANISM SECTION-2 (CDM23X1-5BD3)

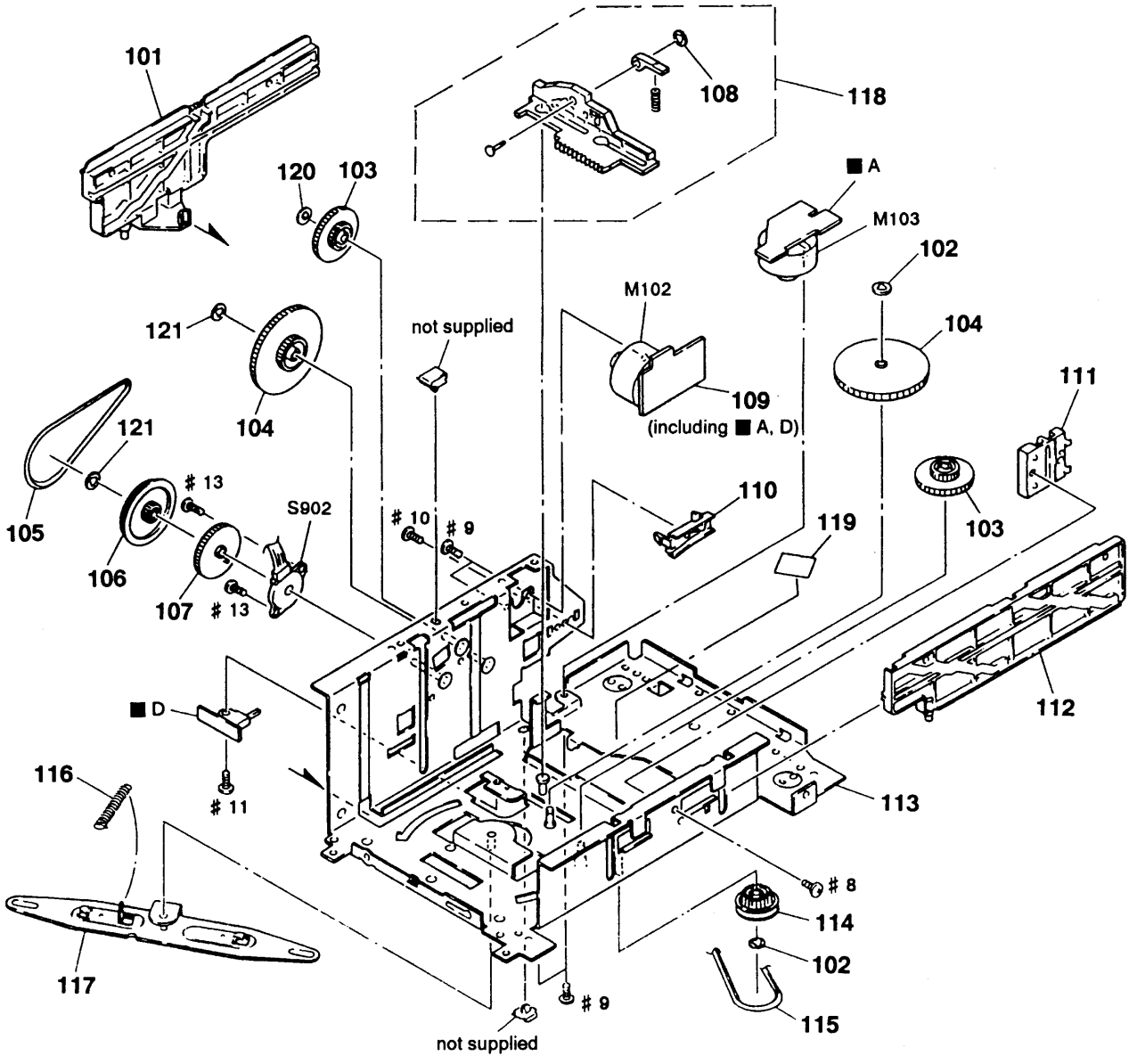

Ref. No.	Part No.	Description	Remark
101	X-4942-939-1	SLIDER (ST-L) ASSY	
102	3-558-708-21	WASHER, STOPPER	
103	4-954-625-01	GEAR (CDM)	
104	3-372-517-01	GEAR (LOADING)	
105	4-954-624-01	BELT (CDM)	
106	3-372-516-01	PULLEY (LOADING)	
107	4-954-636-01	GEAR (E)	
108	3-681-678-00	WASHER, SLIT	
* 110	4-954-633-01	GUIDE (TB-LR)	
* 111	4-954-621-01	STOPPER (TB)	
112	X-4942-940-1	SLIDER (ST-R) ASSY	
* 113	X-4942-937-1	CHASSIS (CDM) ASSY	
114	4-954-637-01	PULLEY (BU)	
115	4-954-635-01	BELT (BU)	
116	4-955-168-01	SPRING, TENSION	
* 117	4-954-632-02	LEVER (JOINT)	
118	A-4660-167-A	SLIDER (BU CAM) ASSY	
119	4-928-473-01	INSULATOR	
120	3-669-595-00	WASHER (2), STOPPER	
121	4-968-919-31	WASHER, STOPPER	
M102	A-4660-586-A	MOTOR ASSY (UP/DOWN MOTOR)	
M103	A-4660-232-A	MOTOR (CDM) ASSY (CLAMP MOTOR)	
S902	1-466-819-11	ENCODER, ROTARY	

6-4. OPTICAL PICK-UP SECTION (BU-5BD3B)

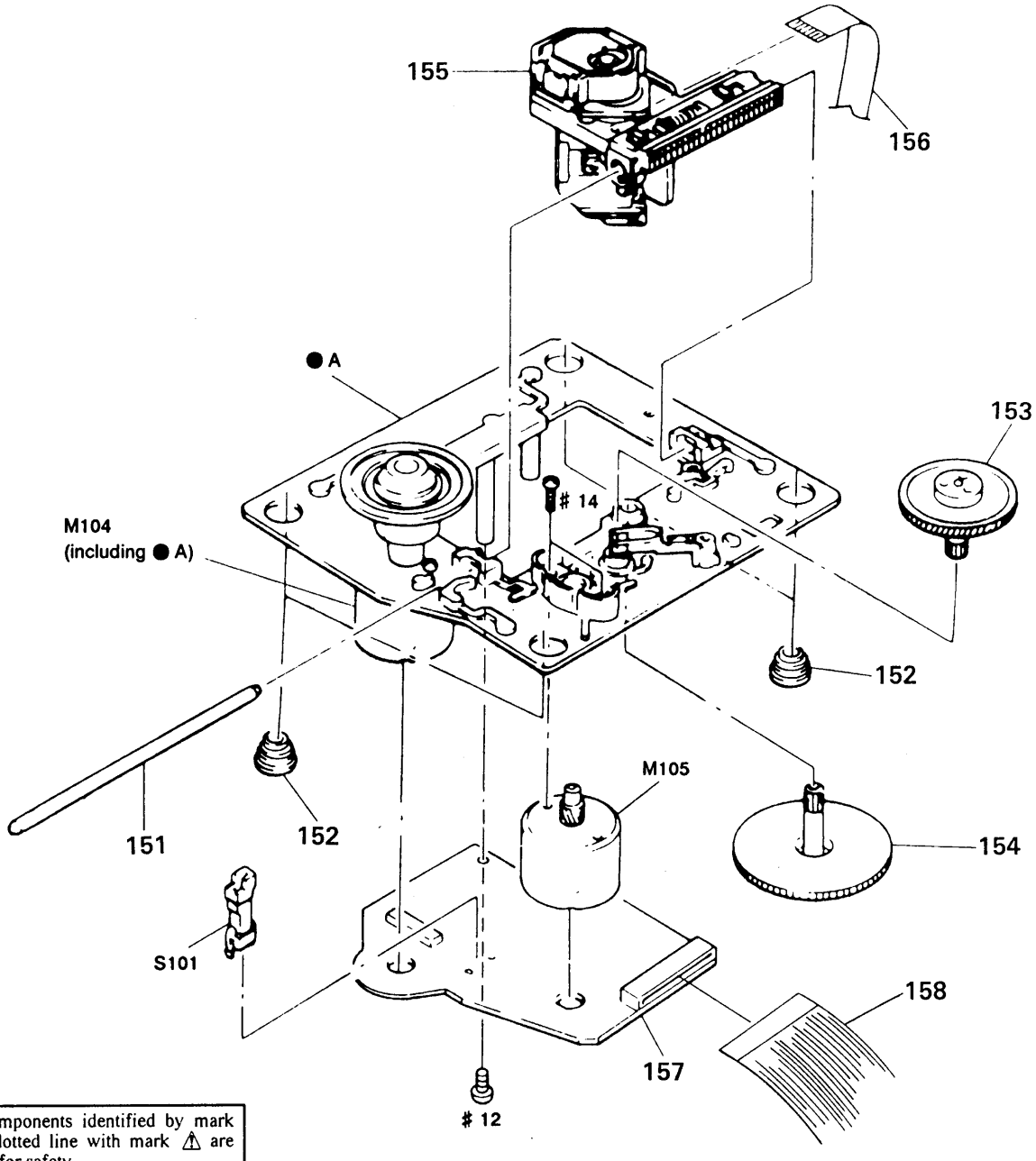

The components identified by mark ⚠ or dotted line with mark ⚠ are critical for safety. Replace only with part number specified.	
Les composants identifiés par une marque ⚠ sont critiques pour la sécurité. Ne les remplacer que par une piéce portant le numéro spécifié.	

Ref. No.	Part No.	Description	Remark
151	4-917-565-01	SHAFT, SLED	
152	4-951-940-01	INSULATOR (BU)	
153	4-917-567-01	GEAR (M)	
154	4-917-564-01	GEAR (P), FLATNESS	
⚠155	8-848-144-11	DEVICE, OPTICAL KSS-240A	
156	1-575-001-11	WIRE, FLAT TYPE (12 CORE)	
* 157	A-4617-371-A	BD BOARD, COMPLETE	
158	1-751-659-11	WIRE (FLAT TYPE)(22 CORE)	
M104	X-4917-523-4	MOTOR ASSY (SPINDLE MOTOR)	
M105	X-4917-504-1	MOTOR ASSY (SLED MOTOR)	

SECTION 7
ELECTRICAL PARTS LIST

BD

NOTE:

The components identified by mark ⚠ or dotted line with mark ⚠ are critical for safety.
Replace only with part number specified.

Les composants identifiés par une marque ⚠ sont critiques pour la sécurité.
Ne les remplacer que par une piéce portant le numéro spécifié.

When indicating parts by reference number, please include the board name.

- Due to standardization, replacements in the parts list may be different from the parts specified in the diagrams or the components used on the set.
- Items marked "*" are not stocked since they are seldom required for routine service. Some delay should be anticipated when ordering these items.
- -XX, -X mean standardized parts, so they may have some difference from the original one.
- Abbreviation
  CND : Canadian model
  AR : Argentine model
  MX : Mexican model
  JE : Tourist model

- RESISTORS
  All resistors are in ohms
  METAL: Metal-film resistor
  METAL OXIDE: Metal Oxide-film resistor
  F : nonflammable
- SEMICONDUCTORS
  In each case, u: μ , for example:
  uA...: μA..., uPA...: μPA..., uPB...: μPB..., uPC...: μPC..., uPD...: μPD...
- CAPACITORS
  uF : μF
- COILS
  uH : μH

Ref. No.	Part No.	Description			Remark
*	A-4617-371-A	BD BOARD, COMPLETE **********			
		< CAPACITOR >			
C101	1-163-038-91	CERAMIC CHIP	0. 1uF		25V
C102	1-163-989-11	CERAMIC CHIP	0. 033uF	10%	25V
C103	1-126-157-11	ELECT	10uF	20%	16V
C104	1-163-038-91	CERAMIC CHIP	0. 1uF		25V
C105	1-126-154-11	ELECT	47uF	20%	6. 3V
C106	1-126-154-11	ELECT	47uF	20%	6. 3V
C107	1-126-154-11	ELECT	47uF	20%	6. 3V
C108	1-163-038-91	CERAMIC CHIP	0. 1uF		25V
C109	1-163-038-91	CERAMIC CHIP	0. 1uF		25V
C110	1-163-989-11	CERAMIC CHIP	0. 033uF	10%	25V
C111	1-131-367-00	TANTALUM	22uF	10%	20V
C112	1-164-232-11	CERAMIC CHIP	0. 01uF		50V
C113	1-164-232-11	CERAMIC CHIP	0. 01uF		50V
C114	1-164-161-11	CERAMIC CHIP	0. 0022uF	10%	100V
C115	1-164-161-11	CERAMIC CHIP	0. 0022uF	10%	100V
C117	1-163-038-91	CERAMIC CHIP	0. 1uF		25V
C118	1-163-038-91	CERAMIC CHIP	0. 1uF		25V
C119	1-164-161-11	CERAMIC CHIP	0. 0022uF	10%	100V
C120	1-163-989-11	CERAMIC CHIP	0. 033uF	10%	25V
C151	1-163-019-00	CERAMIC CHIP	0. 0068uF	10%	50V
C152	1-163-038-91	CERAMIC CHIP	0. 1uF		25V
C153	1-163-006-11	CERAMIC CHIP	560PF	10%	50V
C154	1-164-161-11	CERAMIC CHIP	0. 0022uF	10%	100V
C155	1-163-023-00	CERAMIC CHIP	0. 015uF	5%	50V
C171	1-163-038-91	CERAMIC CHIP	0. 1uF		25V
C172	1-163-038-91	CERAMIC CHIP	0. 1uF		25V
C173	1-163-038-91	CERAMIC CHIP	0. 1uF		25V
C174	1-163-038-91	CERAMIC CHIP	0. 1uF		25V
		< CONNECTOR >			
CN101	1-568-796-11	SOCKET, CONNECTOR 22P			
CN102	1-568-795-11	SOCKET, CONNECTOR 12P			
		< IC >			
IC101	8-752-058-77	IC CXA1372AQ			
IC102	8-759-822-36	IC LA6532M			

Ref. No.	Part No.	Description			Remark
		< JUMPER RESISTOR >			
JR101	1-216-295-91	CONDCTOR, CHIP (2012)			
JR102	1-216-295-91	CONDCTOR, CHIP (2012)			
		< TRANSISTOR >			
Q101	8-729-901-01	TRANSISTOR DTC144EK			
		< RESISTOR >			
R101	1-216-097-00	METAL CHIP	100K	5%	1/10W
R102	1-216-095-00	METAL CHIP	82K	5%	1/10W
R103	1-216-091-00	METAL CHIP	56K	5%	1/10W
R104	1-216-099-00	METAL CHIP	120K	5%	1/10W
R105	1-216-069-00	METAL CHIP	6. 8K	5%	1/10W
R106	1-216-061-00	METAL CHIP	3. 3K	5%	1/10W
R107	1-216-114-00	METAL GLAZE	510K	5%	1/10W
R108	1-216-105-91	METAL GLAZE	220K	5%	1/10W
R109	1-216-061-00	METAL CHIP	3. 3K	5%	1/10W
R110	1-216-049-00	METAL CHIP	1K	5%	1/10W
R111	1-216-049-00	METAL CHIP	1K	5%	1/10W
R112	1-216-083-00	METAL CHIP	27K	5%	1/10W
R113	1-216-071-00	METAL CHIP	8. 2K	5%	1/10W
R114	1-216-105-91	METAL GLAZE	220K	5%	1/10W
R152	1-216-073-00	METAL CHIP	10K	5%	1/10W
R153	1-216-085-00	METAL CHIP	33K	5%	1/10W
R154	1-216-085-00	METAL CHIP	33K	5%	1/10W
R155	1-216-093-00	METAL CHIP	68K	5%	1/10W
R156	1-216-081-00	METAL CHIP	22K	5%	1/10W
R157	1-216-079-00	METAL CHIP	18K	5%	1/10W
R158	1-216-079-00	METAL CHIP	18K	5%	1/10W
R159	1-216-079-00	METAL CHIP	18K	5%	1/10W
R160	1-216-049-00	METAL CHIP	1K	5%	1/10W
R171	1-216-001-00	METAL CHIP	10	5%	1/10W
R172	1-216-001-00	METAL CHIP	10	5%	1/10W
R173	1-216-001-00	METAL CHIP	10	5%	1/10W
R174	1-216-001-00	METAL CHIP	10	5%	1/10W
		< VARIABLE RESISTOR >			
RV101	1-238-600-11	RES, ADJ, CARBON 10K			
RV102	1-238-600-11	RES, ADJ, CARBON 10K			

BD CDM MOTOR MAIN

Ref. No.	Part No.	Description				Remark
		< SWITCH >				
S101	1-572-085-11	SWITCH, LEAF (LIMIT IN)				
**********						
*	1-654-928-11	CDM MOTOR BOARD (A~G)				
		**********				
		< CAPACITOR >				
C101	1-164-159-11	CERAMIC	0.1uF			50V
C102	1-164-159-11	CERAMIC	0.1uF			50V
C103	1-164-159-11	CERAMIC	0.1uF			50V
		< CONNECTOR >				
* CN105	1-568-934-11	PIN, CONNECTOR 7P				
* CN106	1-568-954-11	PIN, CONNECTOR 5P				
		< IC >				
IC501	8-749-010-85	IC ON1024				
IC511	8-749-010-85	IC ON1024				
		< RESISTOR >				
R501	1-247-811-31	CARBON	150	5%	1/4W	
R502	1-249-429-11	CARBON	10K	5%	1/4W	
R511	1-247-811-31	CARBON	150	5%	1/4W	
R512	1-249-429-11	CARBON	10K	5%	1/4W	
		< SWITCH >				
S101	1-571-300-21	SWITCH, ROTARY (BU UP/DOWN)				
S103	1-692-080-11	SWITCH, PUSH (1 KEY)(TRAY IN)				
S103	1-692-080-11	SWITCH, PUSH (1 KEY)(TRAY OUT)				
**********						
*	A-4377-548-A	MAIN BOARD, COMPLETE (US, CND)				
		**********				
*	A-4377-550-A	MAIN BOARD, COMPLETE (E, JE, MX, AR)				
		**********				
*	1-690-880-31	LEAD (WITH CONNECTOR)				
*	3-309-144-21	HEAT SINK				
*	4-942-204-01	PLATE, GROUND				
	7-685-871-01	SCREW +BVTT 3X6 (S)				
		< CAPACITOR >				
C101	1-124-119-00	ELECT	330uF	20%	16V	
C102	1-126-946-11	ELECT	6800uF	20%	16V	
C103	1-136-165-00	FILM	0.1uF	5%	50V	
C104	1-162-282-31	CERAMIC	100PF	10%	50V	
C105	1-124-903-11	ELECT	1uF	20%	50V	
C106	1-162-302-11	CERAMIC	0.0022uF	30%	16V	
C107	1-124-902-00	ELECT	0.47uF	20%	50V	
C108	1-124-443-00	ELECT	100uF	20%	10V	
C109	1-124-443-00	ELECT	100uF	20%	10V	
C110	1-164-159-11	CERAMIC	0.1uF		50V	
C111	1-126-101-11	ELECT	100uF	20%	16V	
C112	1-124-907-11	ELECT	10uF	20%	50V	
C113	1-164-159-11	CERAMIC	0.1uF		50V	
C114	1-124-477-11	ELECT	47uF	20%	25V	
C120	1-124-478-11	ELECT	100uF	20%	25V	
C121	1-124-478-11	ELECT	100uF	20%	25V	
C122	1-124-485-11	ELECT	330uF	20%	35V	
C123	1-124-478-11	ELECT	100uF	20%	25V	
C124	1-126-101-11	ELECT	100uF	20%	16V	
C125	1-124-907-11	ELECT	10uF	20%	50V	
C126	1-124-122-11	ELECT	100uF	20%	50V	
C127	1-164-159-11	CERAMIC	0.1uF		50V	
C128	1-164-159-11	CERAMIC	0.1uF		50V	
C129	1-162-306-11	CERAMIC	0.01uF	30%	16V	
C130	1-164-159-11	CERAMIC	0.1uF		50V	
C131	1-124-907-11	ELECT	10uF	20%	50V	
C132	1-124-903-11	ELECT	1uF	20%	50V	
C133	1-124-903-11	ELECT	1uF	20%	50V	
C138	1-164-159-11	CERAMIC	0.1uF		50V	
C139	1-164-159-11	CERAMIC	0.1uF		50V	
C141	1-162-282-31	CERAMIC	100PF	10%	50V	
C142	1-162-282-31	CERAMIC	100PF	10%	50V	
C143	1-164-159-11	CERAMIC	0.1uF		50V	
C144	1-124-927-11	ELECT	4.7uF	20%	100V	
C145	1-124-927-11	ELECT	4.7uF	20%	100V	
C146	1-164-159-11	CERAMIC	0.1uF		50V	
C147	1-164-159-11	CERAMIC	0.1uF		50V	
C148	1-101-005-00	CERAMIC	22000PF		50V	
C149	1-101-005-00	CERAMIC	22000PF		50V	
C190	1-164-159-11	CERAMIC	0.1uF		50V	
C191	1-161-494-00	CERAMIC	0.022uF		25V	
C201	1-162-282-31	CERAMIC	100PF	10%	50V	
C202	1-162-282-31	CERAMIC	100PF	10%	50V	
C203	1-162-282-31	CERAMIC	100PF	10%	50V	
C204	1-164-159-11	CERAMIC	0.1uF		50V	
C205	1-164-159-11	CERAMIC	0.1uF		50V	
C206	1-164-159-11	CERAMIC	0.1uF		50V	
C207	1-162-282-31	CERAMIC	100PF	10%	50V	
C213	1-164-159-11	CERAMIC	0.1uF		50V	
C214	1-164-159-11	CERAMIC	0.1uF		50V	
C215	1-164-159-11	CERAMIC	0.1uF		50V	
C216	1-125-486-11	DOUBLE LAYERS	0.22F		5.5V	
C217	1-164-159-11	CERAMIC	0.1uF		50V	
C218	1-162-282-31	CERAMIC	100PF	10%	50V	
C219	1-124-907-11	ELECT	10uF	20%	50V	
C220	1-136-161-00	FILM	0.047uF	5%	50V	

Ref. No.	Part No.	Description				Remark
C221	1-162-301-11	CERAMIC	0.0015uF	30%	16V	
C222	1-164-159-11	CERAMIC	0.1uF		50V	
C223	1-136-173-00	FILM	0.47uF	5%	50V	
C224	1-136-153-00	FILM	0.01uF	5%	50V	
C229	1-162-199-31	CERAMIC	10PF	5%	50V	
C230	1-162-199-31	CERAMIC	10PF	5%	50V	
C232	1-136-169-00	FILM	0.22uF	5%	50V	
C233	1-164-159-11	CERAMIC	0.1uF		50V	
C236	1-164-159-11	CERAMIC	0.1uF		50V	
C237	1-164-159-11	CERAMIC	0.1uF		50V	
C238	1-124-126-00	ELECT	47uF	20%	10V	
C239	1-124-126-00	ELECT	47uF	20%	10V	
C240	1-124-443-00	ELECT	100uF	20%	10V	
C241	1-124-443-00	ELECT	100uF	20%	10V	
C242	1-162-282-31	CERAMIC	100PF	10%	50V	
C243	1-162-282-31	CERAMIC	100PF	10%	50V	
C248	1-124-443-00	ELECT	100uF	20%	10V	
C249	1-124-604-00	ELECT	330uF	20%	10V	
C250	1-164-159-11	CERAMIC	0.1uF		50V	
C251	1-164-159-11	CERAMIC	0.1uF		50V	
C253	1-126-176-11	ELECT	220uF	20%	10V	
C254	1-124-907-11	ELECT	10uF	20%	50V	
C255	1-126-101-11	ELECT	100uF	20%	16V	
C256	1-124-927-11	ELECT	4.7uF	20%	100V	
C257	1-124-927-11	ELECT	4.7uF	20%	100V	
C258	1-124-907-11	ELECT	10uF	20%	50V	
C259	1-124-907-11	ELECT	10uF	20%	50V	
C260	1-124-907-11	ELECT	10uF	20%	50V	
C261	1-124-907-11	ELECT	10uF	20%	50V	
C262	1-124-907-11	ELECT	10uF	20%	50V	
C263	1-124-907-11	ELECT	10uF	20%	50V	
C269	1-164-159-11	CERAMIC	0.1uF		50V	
C270	1-124-126-00	ELECT	47uF	20%	10V	
C271	1-124-604-00	ELECT	330uF	20%	10V	
C272	1-164-159-11	CERAMIC	0.1uF		50V	

< CERANUC FILTER >

CF201	1-567-775-11	VIBRATOR, CERAMIC (4.19MHz)

< CONNECTOR >

CN201	1-750-923-31	HOUSING, CONNECTOR (PC BOARD) 15P (SYSTEM CONTROL)
* CN202	1-565-561-11	PIN, CONNECTOR 3P (AU BUS)
* CN205	1-568-934-11	PIN, CONNECTOR 7P
CN206	1-506-469-11	PIN, CONNECTOR 4P
* CN208	1-568-951-11	PIN, CONNECTOR 2P
CN209	1-506-469-11	PIN, CONNECTOR 4P
* CN210	1-573-264-11	PIN, CONNECTOR 5P
* CN211	1-764-108-11	CONNECTOR, FFC 22P
CN212	1-568-838-11	SOCKET, CONNECTOR 21P
* CN301	1-568-832-11	SOCKET, CONNECTOR 13P
CN550	1-564-510-11	PLUG, CONNECTOR 7P

< DIODE >

D101	8-719-200-82	DIODE	11ES2
D102	8-719-200-82	DIODE	11ES2
D103	8-719-200-82	DIODE	11ES2
D104	8-719-200-82	DIODE	11ES2
D105	8-719-200-82	DIODE	11ES2
D106	8-719-200-82	DIODE	11ES2
D107	8-719-200-82	DIODE	11ES2
D108	8-719-200-82	DIODE	11ES2
D109	8-719-015-27	DIODE	UZP-11BB-TP
D110	8-719-200-82	DIODE	11ES2
D111	8-719-016-06	DIODE	UZP-30BB-TP
D112	8-719-015-02	DIODE	UZP-8.2BB
D113	8-719-014-42	DIODE	UZP-4.3BA-TP
D116	8-719-987-63	DIODE	1N4148M
D117	8-719-010-40	DIODE	UZ-5.6BS-TP
D118	8-719-987-63	DIODE	1N4148M
D201	8-719-200-82	DIODE	11ES2
D202	8-719-987-63	DIODE	1N4148M
D206	8-719-200-82	DIODE	11ES2
D207	8-719-200-82	DIODE	11ES2
D208	8-719-987-63	DIODE	1N4148M
D301	8-719-987-63	DIODE	1N4148M
D302	8-719-987-63	DIODE	1N4148M

< IC >

IC101	8-759-630-21	IC	M5290P-16
IC102	8-759-604-86	IC	M5F7807
IC103	8-759-231-53	IC	TA7805S
IC105	8-759-000-48	IC	MC14052BCP
IC106	8-749-921-12	IC	GP1F32T (CD (OPTICAL DIGITAL OUT))
IC201	8-759-295-58	IC	uPD75516GF-572-3B9
IC202	8-752-351-78	IC	CXD2500BQ
IC203	8-752-337-10	IC	CXD2554M
IC204	8-759-155-52	IC	PCM-67U-B
IC205	8-759-634-50	IC	M5218AL
IC207	8-759-289-95	IC	LH5160TG
IC208	8-759-000-58	IC	MC14093BCP
IC209	8-759-501-73	IC	BA6418N
IC210	8-759-501-73	IC	BA6418N
IC211	8-759-501-73	IC	BA6418N

< COIL >

L201	1-410-509-11	INDUCTOR	10uH
L202	1-410-509-11	INDUCTOR	10uH
L203	1-410-509-11	INDUCTOR	10uH
L204	1-410-513-11	INDUCTOR	22uH

MAIN

Ref. No.	Part No.	Description				Remark
		< TRANSISTOR >				
Q101	8-729-209-15	TRANSISTOR	2SD2012			
Q103	8-729-900-80	TRANSISTOR	DTC114ES			
Q104	8-729-173-38	TRANSISTOR	2SA733-K			
Q105	8-729-119-78	TRANSISTOR	2SC2785-HFE			
Q106	8-729-141-83	TRANSISTOR	2SB1094-LK			
Q107	8-729-900-80	TRANSISTOR	DTC114ES			
Q112	8-729-900-80	TRANSISTOR	DTC114ES			
Q113	8-729-900-80	TRANSISTOR	DTC114ES			
Q114	8-729-900-61	TRANSISTOR	DTA114ES			
Q116	8-729-119-78	TRANSISTOR	2SC2785-HFE			
Q117	8-729-119-78	TRANSISTOR	2SC2785-HFE			
		< RESISTOR >				
R101	1-249-425-11	CARBON	4.7K	5%	1/4W	
R102	1-249-425-11	CARBON	4.7K	5%	1/4W	
R103	1-249-421-11	CARBON	2.2K	5%	1/4W	
R104	1-249-429-11	CARBON	10K	5%	1/4W	
R105	1-249-429-11	CARBON	10K	5%	1/4W	
⚠R111	1-217-637-00	FUSIBLE	1	5%	1/4W	F
R112	1-249-413-11	CARBON	470	5%	1/4W	
R113	1-249-413-11	CARBON	470	5%	1/4W	
R114	1-249-414-11	CARBON	560	5%	1/4W	
R115	1-249-411-11	CARBON	330	5%	1/4W	
R116	1-249-411-11	CARBON	330	5%	1/4W	
R117	1-249-412-11	CARBON	390	5%	1/4W	
R118	1-249-412-11	CARBON	390	5%	1/4W	
R120	1-247-757-11	CARBON	2.7K	5%	1/2W	
R122	1-249-413-11	CARBON	470	5%	1/4W	
R132	1-249-429-11	CARBON	10K	5%	1/4W	
R133	1-247-807-31	CARBON	100	5%	1/4W	
R134	1-247-807-31	CARBON	100	5%	1/4W	
R135	1-249-437-11	CARBON	47K	5%	1/4W	
R136	1-249-437-11	CARBON	47K	5%	1/4W	
R140	1-249-417-11	CARBON	1K	5%	1/4W	
R142	1-247-757-11	CARBON	2.7K	5%	1/2W	
⚠R143	1-217-640-11	FUSIBLE	3.3	5%	1/4W	F
R144	1-249-425-11	CARBON	4.7K	5%	1/4W	
R145	1-249-425-11	CARBON	4.7K	5%	1/4W	
R202	1-249-423-11	CARBON	3.3K	5%	1/4W	
R203	1-249-423-11	CARBON	3.3K	5%	1/4W	
R204	1-249-423-11	CARBON	3.3K	5%	1/4W	
R205	1-249-423-11	CARBON	3.3K	5%	1/4W	
R206	1-249-429-11	CARBON	10K	5%	1/4W	
R207	1-249-429-11	CARBON	10K	5%	1/4W	
R208	1-249-429-11	CARBON	10K	5%	1/4W	
R209	1-249-429-11	CARBON	10K	5%	1/4W	
R210	1-249-429-11	CARBON	10K	5%	1/4W	
R211	1-249-429-11	CARBON	10K	5%	1/4W	
R212	1-249-429-11	CARBON	10K	5%	1/4W	
R213	1-249-429-11	CARBON	10K	5%	1/4W	
R214	1-249-429-11	CARBON	10K	5%	1/4W	
R215	1-249-429-11	CARBON	10K	5%	1/4W	
R216	1-249-429-11	CARBON	10K	5%	1/4W	
R217	1-249-429-11	CARBON	10K	5%	1/4W	
R218	1-249-429-11	CARBON	10K	5%	1/4W	
R219	1-249-429-11	CARBON	10K	5%	1/4W	
R220	1-249-429-11	CARBON	10K	5%	1/4W	
R221	1-249-417-11	CARBON	1K	5%	1/4W	
R222	1-249-429-11	CARBON	10K	5%	1/4W	
R223	1-249-429-11	CARBON	10K	5%	1/4W	
R224	1-249-429-11	CARBON	10K	5%	1/4W	
R225	1-249-429-11	CARBON	10K	5%	1/4W	
R226	1-249-429-11	CARBON	10K	5%	1/4W	
R227	1-249-425-11	CARBON	4.7K	5%	1/4W	
R228	1-249-429-11	CARBON	10K	5%	1/4W	
R229	1-249-429-11	CARBON	10K	5%	1/4W	
R230	1-249-429-11	CARBON	10K	5%	1/4W	
R231	1-249-429-11	CARBON	10K	5%	1/4W	
R232	1-249-429-11	CARBON	10K	5%	1/4W	
R233	1-249-429-11	CARBON	10K	5%	1/4W	
R234	1-249-429-11	CARBON	10K	5%	1/4W	
R235	1-249-429-11	CARBON	10K	5%	1/4W	
R236	1-249-429-11	CARBON	10K	5%	1/4W	
R237	1-249-429-11	CARBON	10K	5%	1/4W	
R238	1-249-417-11	CARBON	1K	5%	1/4W	
R239	1-249-423-11	CARBON	3.3K	5%	1/4W	
R240	1-249-423-11	CARBON	3.3K	5%	1/4W	
R241	1-249-429-11	CARBON	10K	5%	1/4W	
R242	1-249-429-11	CARBON	10K	5%	1/4W	
R243	1-249-441-11	CARBON	100K	5%	1/4W	
R244	1-249-413-11	CARBON	470	5%	1/4W	
R245	1-249-413-11	CARBON	470	5%	1/4W	
R246	1-249-413-11	CARBON	470	5%	1/4W	
R248	1-249-409-11	CARBON	220	5%	1/4W	
R249	1-249-413-11	CARBON	470	5%	1/4W	
R250	1-249-413-11	CARBON	470	5%	1/4W	
R251	1-249-413-11	CARBON	470	5%	1/4W	
R252	1-249-413-11	CARBON	470	5%	1/4W	
R253	1-249-413-11	CARBON	470	5%	1/4W	
R254	1-249-413-11	CARBON	470	5%	1/4W	
R255	1-249-413-11	CARBON	470	5%	1/4W	
R256	1-249-421-11	CARBON	2.2K	5%	1/4W	
R257	1-249-421-11	CARBON	2.2K	5%	1/4W	
R264	1-249-408-11	CARBON	180	5%	1/4W	
R265	1-249-408-11	CARBON	180	5%	1/4W	
R266	1-249-397-11	CARBON	22	5%	1/4W	
R267	1-249-397-11	CARBON	22	5%	1/4W	
R268	1-249-417-11	CARBON	1K	5%	1/4W	

The components identified by mark ⚠ or dotted line with mark ⚠ are critical for safety. Replace only with part number specified.	Les composants identifiés par une marque ⚠ sont critiques pour la sécurité. Ne les remplacer que par une piéce portant le numéro spécifié.

Ref. No.	Part No.	Description				Remark
R269	1-249-417-11	CARBON	1K	5%	1/4W	
R270	1-249-417-11	CARBON	1K	5%	1/4W	
R271	1-249-417-11	CARBON	1K	5%	1/4W	
R272	1-249-417-11	CARBON	1K	5%	1/4W	
R273	1-247-807-31	CARBON	100	5%	1/4W	
R276	1-247-807-31	CARBON	100	5%	1/4W	
R277	1-247-807-31	CARBON	100	5%	1/4W	
R278	1-247-887-00	CARBON	220K	5%	1/4W	
R279	1-247-887-00	CARBON	220K	5%	1/4W	
R280	1-249-441-11	CARBON	100K	5%	1/4W	
R281	1-249-435-11	CARBON	33K	5%	1/4W	
R302	1-249-429-11	CARBON	10K	5%	1/4W	
R303	1-249-423-11	CARBON	3.3K	5%	1/4W	
R304	1-249-429-11	CARBON	10K	5%	1/4W	
R1001	1-247-807-31	CARBON	100	5%	1/4W	
R1002	1-247-807-31	CARBON	100	5%	1/4W	
R1003	1-247-807-31	CARBON	100	5%	1/4W	
		< TRANSFORMER >				
⚠T101	1-423-771-11	TRANSFORMER, POWER				
		< TERMINAL >				
TM301	1-537-238-21	TERMINAL BOARD (ANTENNA)				
		< VIBRATOR >				
X201	1-579-280-11	VIBRATOR, CRYSTAL (16.9344MHz)				

****

*	A-4377-547-A	PANEL BOARD, COMPLETE (US, CND) **********
*	A-4377-549-A	PANEL BOARD, COMPLETE (E, JE, MX, AR) **********
*	4-921-941-01	CUSHION (FL)
*	4-954-701-01	HOLDER (FL TUBE)
*	4-960-269-01	HOLDER (FL TUBE)
*	4-971-717-01	HOLDER, LED
	4-971-718-01	COVER

< CAPACITOR >

Ref. No.	Part No.	Description				Remark
C603	1-162-302-11	CERAMIC	0.0022uF	30%	16V	
C604	1-164-159-11	CERAMIC	0.1uF		50V	
C606	1-164-159-11	CERAMIC	0.1uF		50V	
C619	1-162-286-31	CERAMIC	220PF	10%	50V	
C621	1-162-282-31	CERAMIC	100PF	10%	50V	
C622	1-164-159-11	CERAMIC	0.1uF		50V	
C624	1-124-584-00	ELECT	100uF	20%	10V	
C625	1-124-584-00	ELECT	100uF	20%	10V	
C626	1-162-286-31	CERAMIC	220PF	10%	50V	
C627	1-162-286-31	CERAMIC	220PF	10%	50V	
C628	1-126-948-11	ELECT	100uF	20%	35V	
C630	1-164-159-11	CERAMIC	0.1uF		50V	
C631	1-126-157-11	ELECT	10uF	20%	16V	
C632	1-164-159-11	CERAMIC	0.1uF		50V	
C633	1-162-306-11	CERAMIC	0.01uF	30%	16V	
C634	1-136-165-00	FILM	0.1uF	5%	50V	
C635	1-136-165-00	FILM	0.1uF	5%	50V	
C636	1-162-282-31	CERAMIC	100PF	10%	50V	
C637	1-164-159-11	CERAMIC	0.1uF		50V	
C701	1-125-486-11	DOUBLE LAYERS	0.22F		5.5V	
C702	1-164-159-11	CERAMIC	0.1uF		50V	
C703	1-162-306-11	CERAMIC	0.01uF	30%	16V	
C704	1-162-306-11	CERAMIC	0.01uF	30%	16V	
C707	1-162-205-31	CERAMIC	18PF	5%	50V	
C708	1-162-206-31	CERAMIC	20PF	5%	50V	
C709	1-162-306-11	CERAMIC	0.01uF	30%	16V	
C710	1-136-173-00	FILM	0.47uF	5%	50V	
C711	1-136-173-00	FILM	0.47uF	5%	50V	
C713	1-126-160-11	ELECT	1uF	20%	50V	
C714	1-126-923-11	ELECT	220uF	20%	10V	
C715	1-162-306-11	CERAMIC	0.01uF	30%	16V	
C719	1-126-157-11	ELECT	10uF	20%	16V	
C720	1-162-306-11	CERAMIC	0.01uF	30%	16V	
C721	1-164-159-11	CERAMIC	0.1uF		50V	
C722	1-126-948-11	ELECT	100uF	20%	35V	
C730	1-162-286-31	CERAMIC	220PF	10%	50V	
C731	1-162-286-31	CERAMIC	220PF	10%	50V	
C732	1-162-286-31	CERAMIC	220PF	10%	50V	
C733	1-162-286-31	CERAMIC	220PF	10%	50V	
C734	1-162-286-31	CERAMIC	220PF	10%	50V	
C735	1-162-286-31	CERAMIC	220PF	10%	50V	
C736	1-162-286-31	CERAMIC	220PF	10%	50V	
C737	1-162-286-31	CERAMIC	220PF	10%	50V	
C738	1-162-286-31	CERAMIC	220PF	10%	50V	
C739	1-162-286-31	CERAMIC	220PF	10%	50V	
C740	1-162-282-31	CERAMIC	100PF	10%	50V	
C741	1-162-294-31	CERAMIC	1000PF	10%	50V	
C742	1-162-294-31	CERAMIC	1000PF	10%	50V	
		< CERAMIC FILTER >				
CF601	1-567-775-11	VIBRATOR, CERAMIC (4.19MHz)				
CF701	1-579-233-11	VIBRATOR, CERAMIC (5MHz)				
		< CONNECTOR >				
CN601	1-764-005-21	CONNECTOR, FFC/FPC 21P				
* CN602	1-568-856-11	SOCKET, CONNECTOR 13P				
		< COMPOSITION CIRCUIT BLOCK >				
* CP601	1-233-216-11	COMPOSITION CIRCUIT BLOCK				
CP701	1-239-505-11	COMPOSITION CIRCUIT BLOCK				

The components identified by mark ⚠ or dotted line with mark ⚠ are critical for safety. Replace only with part number specified.	Les composants identifiés par une marque ⚠ sont critiques pour la sécurité. Ne les remplacer que par une piéce portant le numéro spécifié.

PANEL

Ref. No.	Part No.	Description	Remark
		< DIODE >	
D601	8-719-987-63	DIODE 1N4148M	
D602	8-719-987-63	DIODE 1N4148M	
D603	8-719-987-63	DIODE 1N4148M	
D604	8-719-987-63	DIODE 1N4148M	
D619	8-719-301-43	DIODE SEL2410E-C-TP6 (▷)	
D620	8-719-301-59	DIODE SEL2910A (DISC 4)	
D621	8-719-301-59	DIODE SEL2910A (DISC 3)	
D622	8-719-301-59	DIODE SEL2910A (DISC 2)	
D623	8-719-301-59	DIODE SEL2910A (DISC 1)	
D624	8-719-301-59	DIODE SEL2910A (DISC 5)	
D625	8-719-301-43	DIODE SEL2410E-C-TP6 (DISC 4)	
D626	8-719-301-43	DIODE SEL2410E-C-TP6 (DISC 3)	
D627	8-719-301-43	DIODE SEL2410E-C-TP6 (DISC 2)	
D628	8-719-301-43	DIODE SEL2410E-C-TP6 (DISC 1)	
D629	8-719-301-43	DIODE SEL2410E-C-TP6 (DISC 5)	
D630	8-719-029-95	DIODE TLN117	
D701	8-719-987-63	DIODE 1N4148M	
D702	8-719-987-63	DIODE 1N4148M	
D703	8-719-987-63	DIODE 1N4148M	
D704	8-719-812-44	LED TLO124 (REC TIMER)	
D705	8-719-032-87	DIODE SEL5420E-TP (DAILY)	
D706	8-719-032-87	DIODE SEL5420E-TP (ONCE)	
D707	8-719-026-64	DIODE SML1260S (PRESET)	
D708	8-719-026-64	DIODE SML1260S (AUTO)	
D709	8-719-026-64	DIODE SML1260S (TUNING)	
D710	8-719-032-87	DIODE SEL5420E-TP (TUNER/BAND)	
D711	8-719-987-63	DIODE 1N4148M	
D712	8-719-987-63	DIODE 1N4148M	
		< FLUORESCENT INDICATOR >	
FL601	1-519-738-11	INDICATOR TUBE, FLUORESCENT	
FLT701	1-517-215-11	INDICATOR TUBE, FLUORESCENT	
		< IC >	
IC601	8-759-295-57	IC uPD75518GF-243-3B9	
IC602	8-759-254-76	IC M66004M4FP-T2	
IC603	8-759-165-81	IC PST600D-T	
IC701	8-759-292-05	IC uPD78043GF-097-3B9	
IC702	8-749-923-34	LE D GP1U59XB	
IC703	8-759-165-81	IC PST600D-T	
		< COIL >	
L601	1-410-521-11	INDUCTOR 100uH	
L602	1-410-521-11	INDUCTOR 100uH	
L603	1-410-521-11	INDUCTOR 100uH	
L701	1-410-521-11	INDUCTOR 100uH	
L702	1-410-521-11	INDUCTOR 100uH	

Ref. No.	Part No.	Description	Remark
		< TRANSISTOR >	
Q601	8-729-119-78	TRANSISTOR 2SC2785-HFE	
Q602	8-729-900-80	TRANSISTOR DTC114ES	
Q604	8-729-018-23	TRANSISTOR TPS626	
Q612	8-729-119-78	TRANSISTOR 2SC2785-HFE	
Q613	8-729-119-78	TRANSISTOR 2SC2785-HFE	
Q701	8-729-119-78	TRANSISTOR 2SC2785-HFE	
Q703	8-729-900-80	TRANSISTOR DTC114ES	
Q704	8-729-900-80	TRANSISTOR DTC114ES	
Q705	8-729-900-80	TRANSISTOR DTC114ES	
Q706	8-729-900-80	TRANSISTOR DTC114ES	
Q707	8-729-900-80	TRANSISTOR DTC114ES	
Q708	8-729-900-80	TRANSISTOR DTC114ES	
Q709	8-729-900-80	TRANSISTOR DTC114ES	
Q710	8-729-900-80	TRANSISTOR DTC114ES	
		< RESISTOR >	
R601	1-249-423-11	CARBON 3.3K 5% 1/4W	
R602	1-249-423-11	CARBON 3.3K 5% 1/4W	
R603	1-249-423-11	CARBON 3.3K 5% 1/4W	
R604	1-249-423-11	CARBON 3.3K 5% 1/4W	
R605	1-249-429-11	CARBON 10K 5% 1/4W	
R606	1-249-429-11	CARBON 10K 5% 1/4W	
R607	1-249-429-11	CARBON 10K 5% 1/4W	
R608	1-249-429-11	CARBON 10K 5% 1/4W	
R609	1-249-429-11	CARBON 10K 5% 1/4W	
R610	1-249-429-11	CARBON 10K 5% 1/4W	
R611	1-249-429-11	CARBON 10K 5% 1/4W	
R612	1-249-429-11	CARBON 10K 5% 1/4W	
R613	1-249-429-11	CARBON 10K 5% 1/4W	
R614	1-249-429-11	CARBON 10K 5% 1/4W	
R615	1-249-423-11	CARBON 3.3K 5% 1/4W	
R617	1-249-423-11	CARBON 3.3K 5% 1/4W	
R618	1-249-423-11	CARBON 3.3K 5% 1/4W	
R619	1-249-423-11	CARBON 3.3K 5% 1/4W	
R620	1-249-409-11	CARBON 220 5% 1/4W	
R621	1-249-409-11	CARBON 220 5% 1/4W	
R622	1-249-409-11	CARBON 220 5% 1/4W	
R623	1-249-409-11	CARBON 220 5% 1/4W	
R624	1-249-409-11	CARBON 220 5% 1/4W	
R625	1-249-410-11	CARBON 270 5% 1/4W	
R626	1-249-410-11	CARBON 270 5% 1/4W	
R627	1-249-410-11	CARBON 270 5% 1/4W	
R628	1-249-410-11	CARBON 270 5% 1/4W	
R629	1-249-410-11	CARBON 270 5% 1/4W	
R630	1-249-411-11	CARBON 330 5% 1/4W	
R631	1-249-393-11	CARBON 10 5% 1/4W	
R632	1-249-425-11	CARBON 4.7K 5% 1/4W	
R633	1-249-429-11	CARBON 10K 5% 1/4W	
R635	1-249-417-11	CARBON 1K 5% 1/4W	

Ref. No.	Part No.	Description				Remark
R636	1-249-417-11	CARBON	1K	5%	1/4W	
R637	1-249-432-11	CARBON	18K	5%	1/4W	
R638	1-247-891-00	CARBON	330K	5%	1/4W	
R651	1-249-413-11	CARBON	470	5%	1/4W	
R652	1-249-413-11	CARBON	470	5%	1/4W	
R653	1-249-413-11	CARBON	470	5%	1/4W	
R654	1-249-413-11	CARBON	470	5%	1/4W	
R655	1-249-415-11	CARBON	680	5%	1/4W	
R656	1-249-415-11	CARBON	680	5%	1/4W	
R657	1-249-415-11	CARBON	680	5%	1/4W	
R658	1-249-415-11	CARBON	680	5%	1/4W	
R659	1-249-417-11	CARBON	1K	5%	1/4W	
R660	1-249-417-11	CARBON	1K	5%	1/4W	
R661	1-249-417-11	CARBON	1K	5%	1/4W	
R662	1-249-417-11	CARBON	1K	5%	1/4W	
R663	1-249-419-11	CARBON	1.5K	5%	1/4W	
R664	1-249-419-11	CARBON	1.5K	5%	1/4W	
R665	1-249-419-11	CARBON	1.5K	5%	1/4W	
R666	1-249-419-11	CARBON	1.5K	5%	1/4W	
R667	1-249-421-11	CARBON	2.2K	5%	1/4W	
R668	1-249-421-11	CARBON	2.2K	5%	1/4W	
R669	1-249-430-11	CARBON	12K	5%	1/4W	
R670	1-249-421-11	CARBON	2.2K	5%	1/4W	
R671	1-249-425-11	CARBON	4.7K	5%	1/4W	
R672	1-249-425-11	CARBON	4.7K	5%	1/4W	
R673	1-249-427-11	CARBON	6.8K	5%	1/4W	F
R674	1-249-425-11	CARBON	4.7K	5%	1/4W	
R675	1-249-430-11	CARBON	12K	5%	1/4W	
R676	1-249-430-11	CARBON	12K	5%	1/4W	
R678	1-249-430-11	CARBON	12K	5%	1/4W	
R680	1-249-421-11	CARBON	2.2K	5%	1/4W	
R701	1-249-423-11	CARBON	3.3K	5%	1/4W	
R702	1-249-413-11	CARBON	470	5%	1/4W	
R703	1-249-415-11	CARBON	680	5%	1/4W	
R704	1-249-417-11	CARBON	1K	5%	1/4W	
R705	1-249-423-11	CARBON	3.3K	5%	1/4W	
R706	1-249-413-11	CARBON	470	5%	1/4W	
R707	1-249-415-11	CARBON	680	5%	1/4W	
R708	1-249-417-11	CARBON	1K	5%	1/4W	
R709	1-249-419-11	CARBON	1.5K	5%	1/4W	
R710	1-249-421-11	CARBON	2.2K	5%	1/4W	
R711	1-249-425-11	CARBON	4.7K	5%	1/4W	
R712	1-249-417-11	CARBON	1K	5%	1/4W	
R713	1-249-417-11	CARBON	1K	5%	1/4W	
R714	1-249-417-11	CARBON	1K	5%	1/4W	
R715	1-249-417-11	CARBON	1K	5%	1/4W	
R716	1-249-417-11	CARBON	1K	5%	1/4W	
R717	1-249-417-11	CARBON	1K	5%	1/4W	
R718	1-249-417-11	CARBON	1K	5%	1/4W	
R719	1-249-425-11	CARBON	4.7K	5%	1/4W	
R720	1-249-429-11	CARBON	10K	5%	1/4W	
R721	1-249-429-11	CARBON	10K	5%	1/4W	
R722	1-249-393-11	CARBON	10	5%	1/4W	
R723	1-249-429-11	CARBON	10K	5%	1/4W	
R724	1-249-433-11	CARBON	22K	5%	1/4W	
R725	1-249-437-11	CARBON	47K	5%	1/4W	
R726	1-249-437-11	CARBON	47K	5%	1/4W	
R727	1-249-437-11	CARBON	47K	5%	1/4W	
R728	1-249-437-11	CARBON	47K	5%	1/4W	
R729	1-249-429-11	CARBON	10K	5%	1/4W	
R730	1-249-429-11	CARBON	10K	5%	1/4W	
R731	1-249-429-11	CARBON	10K	5%	1/4W	
R733	1-249-409-11	CARBON	220	5%	1/4W	
R734	1-249-408-11	CARBON	180	5%	1/4W	
R735	1-249-408-11	CARBON	180	5%	1/4W	
R736	1-249-413-11	CARBON	470	5%	1/4W	
R737	1-249-408-11	CARBON	180	5%	1/4W	
R738	1-249-429-11	CARBON	10K	5%	1/4W	
R739	1-249-429-11	CARBON	10K	5%	1/4W	
R740	1-247-891-00	CARBON	330K	5%	1/4W	
R741	1-249-429-11	CARBON	10K	5%	1/4W	
R742	1-249-417-11	CARBON	1K	5%	1/4W	
R743	1-249-417-11	CARBON	1K	5%	1/4W	
R780	1-249-421-11	CARBON	2.2K	5%	1/4W	

< SWITCH >

S601	1-572-184-11	SWITCH, KEYBOARD (▶▶ ▷▷|)
S602	1-572-184-11	SWITCH, KEYBOARD (|◁◁ ◀◀)
S603	1-572-184-11	SWITCH, KEYBOARD (□)
S604	1-572-184-11	SWITCH, KEYBOARD (▷)
S605	1-572-184-11	SWITCH, KEYBOARD (DISC 1)
S606	1-572-184-11	SWITCH, KEYBOARD (⏏)
S607	1-572-184-11	SWITCH, KEYBOARD (CHECK)
S608	1-572-184-11	SWITCH, KEYBOARD (▯▯)
S609	1-572-184-11	SWITCH, KEYBOARD (DISC 2)
S610	1-572-184-11	SWITCH, KEYBOARD (⏏)
S611	1-572-184-11	SWITCH, KEYBOARD (CLEAR)
S612	1-572-184-11	SWITCH, KEYBOARD (CONTINUE)
S613	1-572-184-11	SWITCH, KEYBOARD (DISC 3)
S614	1-572-184-11	SWITCH, KEYBOARD (⏏)
S615	1-572-184-11	SWITCH, KEYBOARD (EDIT)
S616	1-572-184-11	SWITCH, KEYBOARD (SHUFFLE)
S617	1-572-184-11	SWITCH, KEYBOARD (DISC 4)
S618	1-572-184-11	SWITCH, KEYBOARD (⏏)
S619	1-572-184-11	SWITCH, KEYBOARD (MEMO CHECK)
S620	1-572-184-11	SWITCH, KEYBOARD (PROGRAM)
S621	1-572-184-11	SWITCH, KEYBOARD (DISC 5)
S622	1-572-184-11	SWITCH, KEYBOARD (⏏)
S624	1-572-184-11	SWITCH, KEYBOARD (REPEAT)
S625	1-572-184-11	SWITCH, KEYBOARD (CHARACTOR)

Ref. No.	Part No.	Description				Remark
S626	1-572-184-11	SWITCH, KEYBOARD (CHARACTOR)				
S628	1-572-184-11	SWITCH, KEYBOARD (CURSOR)				
S629	1-572-184-11	SWITCH, KEYBOARD (MEMO INPUT)				
S630	1-572-184-11	SWITCH, KEYBOARD (ERASE)				
S631	1-572-184-11	SWITCH, KEYBOARD (TIME)				
S632	1-572-184-11	SWITCH, KEYBOARD (S, F, FILE)				
S701	1-572-184-11	SWITCH, KEYBOARD (TUNER/BAND)				
S702	1-572-184-11	SWITCH, KEYBOARD (MODE)				
S703	1-572-184-11	SWITCH, KEYBOARD (MEMORY/NEXT)				
S704	1-572-184-11	SWITCH, KEYBOARD (STEREO/MONO)				
S705	1-572-184-11	SWITCH, KEYBOARD (CLOCK SET)				
S706	1-572-184-11	SWITCH, KEYBOARD (TIMER SET)				
S707	1-572-184-11	SWITCH, KEYBOARD (ONCE)				
S708	1-572-184-11	SWITCH, KEYBOARD (DAILY)				
S709	1-572-184-11	SWITCH, KEYBOARD (REC TIMER)				
S710	1-572-184-11	SWITCH, KEYBOARD (SLEEP)				
S711	1-572-184-11	SWITCH, KEYBOARD (DISPLAY)				
S901	1-467-914-11	ENCODER, ROTARY (MULTI CONTROLLER)				
		< VIBRATOR >				
XT701	1-567-098-41	VIBRATOR, CRYSTAL (32.768kHz)				
**********						
*	A-4303-461-A	TCB BOARD, COMPLETE (E, JE, AR, MX)				
		**********				
*	A-4303-462-A	TCB BOARD, COMPLETE (US, CND)				
		**********				
		< CAPACITOR >				
C1	1-126-934-11	ELECT	220uF	20%	16V	
C2	1-163-031-11	CERAMIC CHIP	0.01uF		50V	
C3	1-163-009-11	CERAMIC CHIP	1000PF	10%	50V	
C5	1-163-033-00	CERAMIC CHIP	0.022uF		50V	
C6	1-163-091-00	CERAMIC CHIP	8PF	0.25PF	50V	
C7	1-163-227-11	CERAMIC CHIP	10PF	0.5PF	50V	
C12	1-164-343-11	CERAMIC CHIP	0.056uF	10%	25V	(E, JE, AR, MX)
C13	1-163-033-11	CERAMIC CHIP	0.022uF		50V	(E, JE, AR, MX)
C14	1-163-088-00	CERAMIC CHIP	5PF	0.25PF	50V	(E, JE, AR, MX)
C21	1-163-099-00	CERAMIC CHIP	18PF	5%	50V	
C22	1-163-099-00	CERAMIC CHIP	18PF	5%	50V	
C23	1-163-031-11	CERAMIC CHIP	0.01uF		50V	
C24	1-163-031-11	CERAMIC CHIP	0.01uF		50V	
C25	1-163-031-11	CERAMIC CHIP	0.01uF		50V	
C26	1-164-346-11	CERAMIC CHIP	1uF		16V	
C27	1-124-257-00	ELECT	2.2uF	20%	50V	
C28	1-163-031-11	CERAMIC CHIP	0.01uF		50V	
C29	1-163-031-11	CERAMIC CHIP	0.01uF		50V	
C31	1-124-257-00	ELECT	2.2uF	20%	50V	
C32	1-163-031-11	CERAMIC CHIP	0.01uF		50V	
C33	1-163-038-00	CERAMIC CHIP	0.1uF		25V	
C34	1-163-038-00	CERAMIC CHIP	0.1uF		25V	
C51	1-163-031-11	CERAMIC CHIP	0.01uF		50V	
C52	1-126-162-11	ELECT	3.3uF	20%	50V	
C53	1-163-031-11	CERAMIC CHIP	0.01uF		50V	
C54	1-163-031-11	CERAMIC CHIP	0.01uF		50V	
C55	1-163-105-00	CERAMIC CHIP	33PF	5%	50V	
C57	1-164-346-11	CERAMIC CHIP	1uF		16V	
C58	1-164-346-11	CERAMIC CHIP	1uF		16V	
C59	1-164-346-11	CERAMIC CHIP	1uF		16V	
C60	1-163-038-00	CERAMIC CHIP	0.1uF		25V	
C61	1-163-022-00	CERAMIC CHIP	0.012uF	10%	50V	(E, JE, AR, MX)
C61	1-163-023-00	CERAMIC CHIP	0.015uF		50V	(US, CND)
C62	1-163-022-00	CERAMIC CHIP	0.012uF	10%	50V	(E, JE, AR, MX)
C62	1-163-023-00	CERAMIC CHIP	0.015uF		50V	(US, CND)
C63	1-126-301-11	ELECT	1uF	20%	50V	
C64	1-126-301-11	ELECT	1uF	20%	50V	
C65	1-126-301-11	ELECT	1uF	20%	50V	
C66	1-126-301-11	ELECT	1uF	20%	50V	
C70	1-163-031-11	CERAMIC CHIP	0.01uF		50V	
C71	1-163-031-11	CERAMIC CHIP	0.01uF		50V	
C72	1-126-934-11	ELECT	220uF	20%	16V	
C73	1-124-257-00	ELECT	2.2uF	20%	50V	
C74	1-163-031-11	CERAMIC CHIP	0.01uF		50V	
C75	1-126-157-11	ELECT	10uF	20%	16V	
C76	1-126-933-11	ELECT	100uF	20%	16V	
C77	1-163-117-00	CERAMIC CHIP	100PF	5%	50V	
C78	1-163-031-11	CERAMIC CHIP	0.01uF		50V	
C79	1-126-157-11	ELECT	10uF	20%	16V	
C80	1-126-925-11	ELECT	470uF	20%	10V	
C81	1-163-031-11	CERAMIC CHIP	0.01uF		50V	
C82	1-163-031-11	CERAMIC CHIP	0.01uF		50V	
C86	1-163-016-00	CERAMIC CHIP	3900PF	10%	50V	
C87	1-163-016-00	CERAMIC CHIP	3900PF	10%	50V	
		< FILTER >				
CF1	1-567-389-11	FILTER, CERAMIC				
CF51	1-567-389-11	FILTER, CERAMIC				
		< TERMINAL >				
* CN3	1-537-613-11	TERMINAL (8P)				

Ref. No.	Part No.	Description	Remark
		< VARIABLE CAPACITOR >	
CV1	1-141-227-00	CAP, TRIMMER (E, JE, AR, MX)	
CV2	1-141-227-00	CAP, TRIMMER (E, JE, AR, MX)	
		< DIODE >	
D1	8-719-976-30	DIODE KV1560N (E, JE, AR, MX)	
D21	8-719-422-46	DIODE MA8056	
D51	8-719-016-74	DIODE 1SS352	
		< FRONT END >	
FE1	1-465-673-11	FRONT END (2 BAND)	
FE2	1-239-260-11	ESCAPSULATED COMPONENT (US, CND)	
FE2	1-239-262-11	ESCAPSULATED COMPONENT (E, JE, AR, MX)	
		< IC >	
IC21	8-759-821-43	IC LC7218M	
IC51	8-759-823-68	IC LA1851NM	
		< TRANSFORMER >	
IFT51	1-406-821-11	COIL (DISCRIMINATOR)	
IFT52	1-404-713-11	TRANSFORMER, IF	
		< JUMPER RESISTOR >	
JW1	1-216-295-00	METAL CHIP 0 5% 1/10W	
JW2	1-216-295-00	METAL CHIP 0 5% 1/10W	
JW3	1-216-295-00	METAL CHIP 0 5% 1/10W	(E, JE, AR, MX)
JW4	1-216-295-00	METAL CHIP 0 5% 1/10W	(US, CND)
JW5	1-216-295-00	METAL CHIP 0 5% 1/10W	(US, CND)
JW6	1-216-295-00	METAL CHIP 0 5% 1/10W	
		< COIL >	
L51	1-408-798-00	CHIP INDUCTOR 1MMH	
		< FILTER >	
LPF51	1-239-597-11	FILTER, LOW PASS	
LPF52	1-239-597-11	FILTER, LOW PASS	
		< TRANSISTOR >	
Q1	8-729-804-72	TRANSISTOR 2SC2814-F4	
Q3	8-729-810-16	TRANSISTOR 2SA1678	
Q4	8-729-602-36	TRANSISTOR 2SA1602-F (E, JE, AR, MX)	
Q5	8-729-602-36	TRANSISTOR 2SA1602-F (E, JE, AR, MX)	
Q6	8-729-810-28	TRANSISTOR 2SC4398 (E, JE, AR, MX)	
Q7	8-729-810-28	TRANSISTOR 2SC4398 (E, JE, AR, MX)	
Q21	8-729-602-21	TRANSISTOR 2SC4154-F	
Q22	8-729-232-69	TRANSISTOR 2SK208GR3	
Q23	8-729-232-59	TRANSISTOR 2SC4666B	
Q51	8-729-602-21	TRANSISTOR 2SC4154-F	
Q52	8-729-602-21	TRANSISTOR 2SC4154-F	
Q53	8-729-810-28	TRANSISTOR 2SC4398	
		< RESISTOR >	
R1	1-216-037-00	METAL CHIP 330 5% 1/10W	
R2	1-216-037-00	METAL CHIP 330 5% 1/10W	
R3	1-216-109-00	METAL CHIP 330K 5% 1/10W	
R4	1-216-037-00	METAL CHIP 330 5% 1/10W	
R7	1-216-017-00	METAL CHIP 47 5% 1/10W	
R8	1-216-073-00	METAL CHIP 10K 5% 1/10W	(E, JE, AR, MX)
R9	1-216-089-11	METAL CHIP 47K 5% 1/10W	
R10	1-216-097-11	METAL CHIP 100K 5% 1/10W	
R16	1-216-073-00	METAL CHIP 10K 5% 1/10W	(E, JE, AR, MX)
R17	1-216-121-00	METAL CHIP 1M 5% 1/10W	(E, JE, AR, MX)
R18	1-216-073-00	METAL CHIP 10K 5% 1/10W	(E, JE, AR, MX)
R21	1-216-049-00	METAL CHIP 1K 5% 1/10W	
R22	1-216-049-00	METAL CHIP 1K 5% 1/10W	
R23	1-216-049-00	METAL CHIP 1K 5% 1/10W	
R24	1-216-025-00	METAL CHIP 100 5% 1/10W	
R25	1-216-065-00	METAL CHIP 4.7K 5% 1/10W	
R26	1-216-049-00	METAL CHIP 1K 5% 1/10W	
R27	1-216-073-00	METAL CHIP 10K 5% 1/10W	(E, JE, AR, MX)
R28	1-216-073-00	METAL CHIP 10K 5% 1/10W	
R29	1-216-025-00	METAL CHIP 100 5% 1/10W	
R30	1-216-061-00	METAL CHIP 3.3K 5% 1/10W	
R31	1-216-043-00	METAL CHIP 560 5% 1/10W	
R32	1-216-049-00	METAL CHIP 1K 5% 1/10W	
R33	1-216-035-00	METAL CHIP 270 5% 1/10W	
R34	1-216-065-00	METAL CHIP 4.7K 5% 1/10W	
R35	1-216-057-00	METAL CHIP 2.2K 5% 1/10W	
R36	1-216-065-00	METAL CHIP 4.7K 5% 1/10W	
R37	1-216-065-00	METAL CHIP 4.7K 5% 1/10W	
R38	1-216-025-00	METAL CHIP 100 5% 1/10W	
R51	1-216-049-00	METAL CHIP 1K 5% 1/10W	
R52	1-216-081-00	METAL CHIP 22K 5% 1/10W	
R53	1-216-085-00	METAL CHIP 33K 5% 1/10W	
R54	1-216-071-00	METAL CHIP 8.2K 5% 1/10W	
R55	1-216-075-00	METAL CHIP 12K 5% 1/10W	
R57	1-216-073-00	METAL CHIP 10K 5% 1/10W	
R58	1-216-066-00	METAL CHIP 5.1K 5% 1/10W	
R59	1-216-065-00	METAL CHIP 4.7K 5% 1/10W	
R60	1-216-065-00	METAL CHIP 4.7K 5% 1/10W	
R61	1-216-115-00	METAL CHIP 560K 5% 1/10W	
R62	1-216-115-00	METAL CHIP 560K 5% 1/10W	
R63	1-216-049-00	METAL CHIP 1K 5% 1/10W	
R64	1-216-049-00	METAL CHIP 1K 5% 1/10W	

Ref. No.	Part No.	Description	Remark
R65	1-216-073-00	METAL CHIP 10K 5% 1/10W	
R66	1-216-073-00	METAL CHIP 10K 5% 1/10W	
R67	1-216-057-00	METAL CHIP 2.2K 5% 1/10W	
R68	1-216-057-00	METAL CHIP 2.2K 5% 1/10W	
R69	1-216-025-00	METAL CHIP 100 5% 1/10W	
R70	1-216-025-00	METAL CHIP 100 5% 1/10W	
R71	1-216-089-11	METAL CHIP 47K 5% 1/10W	
R72	1-216-073-00	METAL CHIP 10K 5% 1/10W	
R73	1-216-073-00	METAL CHIP 10K 5% 1/10W	
R74	1-216-013-00	METAL CHIP 33 5% 1/10W	
		< VARIABLE RESISTOR >	
RV51	1-238-601-11	RES, ADJ, CARBON 22K	
RV52	1-238-601-11	RES, ADJ, CARBON 22K	
RV53	1-238-598-11	RES, ADJ, CARBON 2.2K	
		< COIL >	
T1	1-402-424-11	COIL (ANT, SW3)(E, JE, AR, MX)	
T2	1-406-346-11	COIL (OSC, SW3)(E, JE, AR, MX)	
		< CONNECTOR >	
TP51	1-564-505-11	PLUG, CONNECTOR 2P	
		< VIBRATOR >	
X21	1-579-585-11	VIBRATOR, CRYSTAL (7.2MHz)	
X51	1-577-075-11	OSCILLATOR, CERAMIC (456kHz)	

****

MISCELLANEOUS
****

6	1-769-271-11	WIRE (FLAT TYPE)(13 CORE)	
7	1-751-690-11	WIRE (FLAT TYPE)(21 CORE)	
60	1-452-676-11	MAGNET	
⚠155	8-848-144-11	DEVICE, OPTICAL KSS-240A	
156	1-575-001-11	WIRE, FLAT TYPE (12 CORE)	
158	1-751-659-11	WIRE (FLAT TYPE)(22 CORE)	
FL601	1-519-738-11	INDICATOR TUBE, FLUORESCENT	
FLT701	1-517-215-11	INDICATOR TUBE, FLUORESCENT	
M101	A-4660-586-A	MOTOR ASSY (LOADING MOTOR)	
M102	A-4660-586-A	MOTOR ASSY (UP/DOWN MOTOR)	
M103	A-4660-232-A	MOTOR (CDM) ASSY (CLAMP MOTOR)	
M104	X-4917-523-4	MOTOR ASSY (SPINDLE MOTOR)	
M105	X-4917-504-1	MOTOR ASSY (SLED MOTOR)	
S902	1-466-819-11	ENCODER, ROTARY	

****

****

HARDWARE LIST
****

Ref. No.	Part No.	Description	Remark
#1	7-685-871-01	SCREW +BVTT 3X6 (S)	
#2	7-685-647-79	SCREW +BVTP 3X10 TYPE2 N-S	
#3	7-682-547-09	SCREW +BVTT 3X6 (S)	
#4	7-621-775-10	SCREW +B 2.6X4	
#5	7-685-646-79	SCREW +BVTP 3X8 TYPE2 N-S	
#6	7-621-770-XX	SCREW +PTT 2.6X8 (S)	
#7	7-685-533-19	SCREW +BTP 2.6X6 TYPE2 N-S	
#8	7-685-645-79	SCREW +BTP 3X6 TYPE2 N-S	
#9	7-621-775-00	SCREW +B 2.6X3	
#10	7-685-131-19	SCREW +BTP 2.6X4 TYPE2 N-S	
#11	7-621-773-95	SCREW +BVTT 2.6X6 (S)	
#12	7-685-134-19	SCREW +BTP 2.6X8 TYPE2 N-S	
#13	7-621-255-35	SCREW +BVTT 2X5 (S)	
#14	7-621-255-15	SCREW +P 2X3	

The components identified by mark ⚠ or dotted line with mark ⚠ are critical for safety. Replace only with part number specified.	Les composants identifiés par une marque ⚠ sont critiques pour la sécurité. Ne les remplacer que par une piéce portant le numéro spécifié.

MEMO

REVISION HISTORY

Clicking the version allows you to jump to the revised page.
Also, clicking the version at the upper right on the revised page allows you to jump to the next revised page.

Ver.	Date	Description of Revision
1.1	2001.06	Correction of exploded views (158) and electrical parts list. (SPM-01020)
1.0	1995.02	New.